TRELLEBORG SEALING SOLUTIONS

Manufacturing of High Performance Composite Structures

IN-SITU THERMOPLASTIC CONSOLIDATION

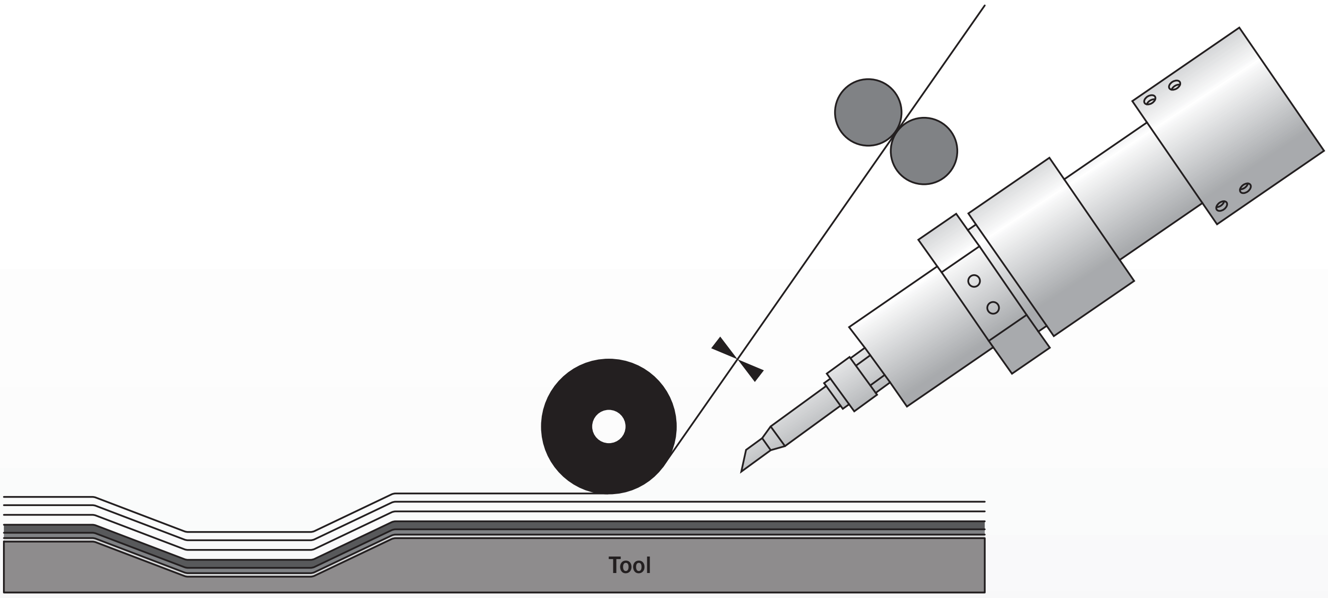

Abstract

Additive Manufacturing of High Performance Composite Structures

Authors: Zachary August and David Hauber
Trelleborg Sealing Solutions Albany, NY

The ultimate goal for composite manufacturing is the fully automated production of complex composite structures. This is being accomplished for unreinforced plastics and metals with modern Additive Manufacturing (AM) technologies. Automated Fiber Placement (AFP) achieves automated thermoset composite lay-up but requires an autoclave or other post process.

In-situ consolidation of Thermoplastic Composites (TPC) with AFP eliminates post processes, achieving the goal of additive manufacturing of high performance composite structures.

Trelleborg Sealing Solutions has used in-situ TPC AFP in serial production of composite structures for over 30 years, but acceptance in aerospace applications has been slow. Recent work at Trelleborg Sealing Solutions and other research centers has resulted in improved throughput and consolidation.

The technology is converging on a solution for additive manufacturing of high performance composite structures suitable for aerospace applications. This paper will outline the problems faced, methods employed and results of recent research on in-situ TPC AFP.

1. INTRODUCTION

1.1 Additive Manufacturing for Composites

Just as the machine tool industry has progressed from manual operations to automated CNC machining centers, the composites industry is moving from hand lay-up to automated processes. Unlike the machine tool industry that relies on subtractive processes, composites require additive processes.

In order to take advantage of the directional strength characteristics of composites, the fibers must be placed layer-by-layer in orientations and patterns that optimize their strength and stiffness for a given application.

Additive manufacturing processes for metals and polymers are capable of automatically manufacturing complex structures directly from a 3D CAD model with very little wasted materials. Designers can create a model, “print” it, and have a functional part in a short period of time. Similar processes are needed for composites.

1.2 Automated Fiber Placement

AFP is a well-established manufacturing process for thermoset composites that is now used throughout the aerospace industry. The benefits of AFP include:

- Material and labor savings
- Quality improvement
- Accurate fiber placement at any angle on complex surfaces
- Intrinsically low bulk factor and automatic debulking

We finally have an automated process for composites comparable to CNC workcells for the metalworking industry. However, with thermoset composites there is still a curing step that requires a manual bagging operation and an autoclave cycle.

The autoclave is a bottleneck in the manufacturing process and there are efforts around the world to develop Out-of-Autoclave (OoA) processes. What is needed is a process that eliminates the expensive, energy inefficient, time consuming, wasteful, bottleneck of bagging and curing of thermoset composites.

1.3 Thermoplastic Composites

Thermoplastic Composites have many advantages over thermosets, including:

- Melt processable (no cure chemistry, no long soak times, cohesive bonding)
- Extreme toughness/damage tolerance
- Superior solvent and chemical resistance
- No toxicity/hazardous chemical issues
- No refrigeration or out-time considerations
- Recyclable
- Excellent FST properties (V-0 rating, limiting oxygen index 65% for carbon/PEEK)
- Hydrolytic stability - low water absorption (0.2% for carbon/PEEK)
- Stable glass transition temperature (Tg) – even under hot/wet conditions
- Good fatigue resistance
- Low coefficient of friction
- High wear resistance (106 MPa·m/s) and affect a relatively large area

Even with many advantages, Thermoplastic Composites have been slow to gain acceptance for aerospace applications. Thermoplastic resins are inherently more viscous than thermoset resins due to their high molecular weight which makes it more difficult to wet out the reinforcing fiber. However, thermoplastic resins (especially commodity resins such as PE, PP & PA) are less expensive.

Ultimately the material property advantages and lifecycle cost reductions will favor TPCs just as has already occurred for thermoplastics in general. As is the case with all material systems, initial costs are high but costs decrease as the sales volume increases due to economies of scale. This has certainly been the case for carbon fiber and thermoset composites. Major capacity expansions are planned by the primary suppliers and new suppliers of thermoplastic composites are entering the market.

A major advantage of thermoplastics over thermosets is cycle time reduction. Just as injection molding, extrusion and other process technologies have revolutionized neat resin and short fiber reinforced thermoplastic part manufacturing, similar processes are coming on-line for continuous fiber reinforced TPCs.

Continuous compression molding, diaphragm forming, stamping and other methods are lowering production costs for mass produced TPC structures. Although these are improvements over autoclave processing, setup and tooling costs are only suitable for large production runs. What is needed is an additive manufacturing process for high performance composite structures.

2. IN-SITU AFP OF THERMOPLASTIC MATRIX COMPOSITES

2.1 History

In-situ automated fiber placement of thermoplastic matrix composites is an additive manufacturing process for high performance composite structures. It combines the advantages of AFP and TPCs to automatically fabricate completed structures without an autoclave or other post consolidation process. This is not a new technology, it has been around for more than 25 years.

Figure 4 illustrates early prototype and production TPC AFP heads developed by Trelleborg Sealing Solutions in the 1980s. The basic process used is illustrated in the schematic below. A high energy heat source, such as a hot gas torch (HGT) in this case, is used to heat the incoming tape and previous ply which is then bonded together with a compaction roller.

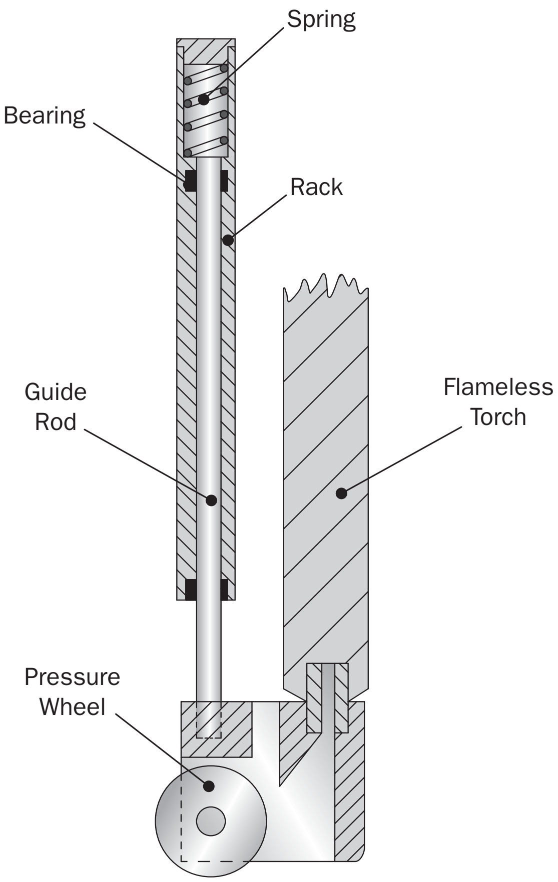

Figure 1 - ADC early prototype and production heads along with basic process schematic

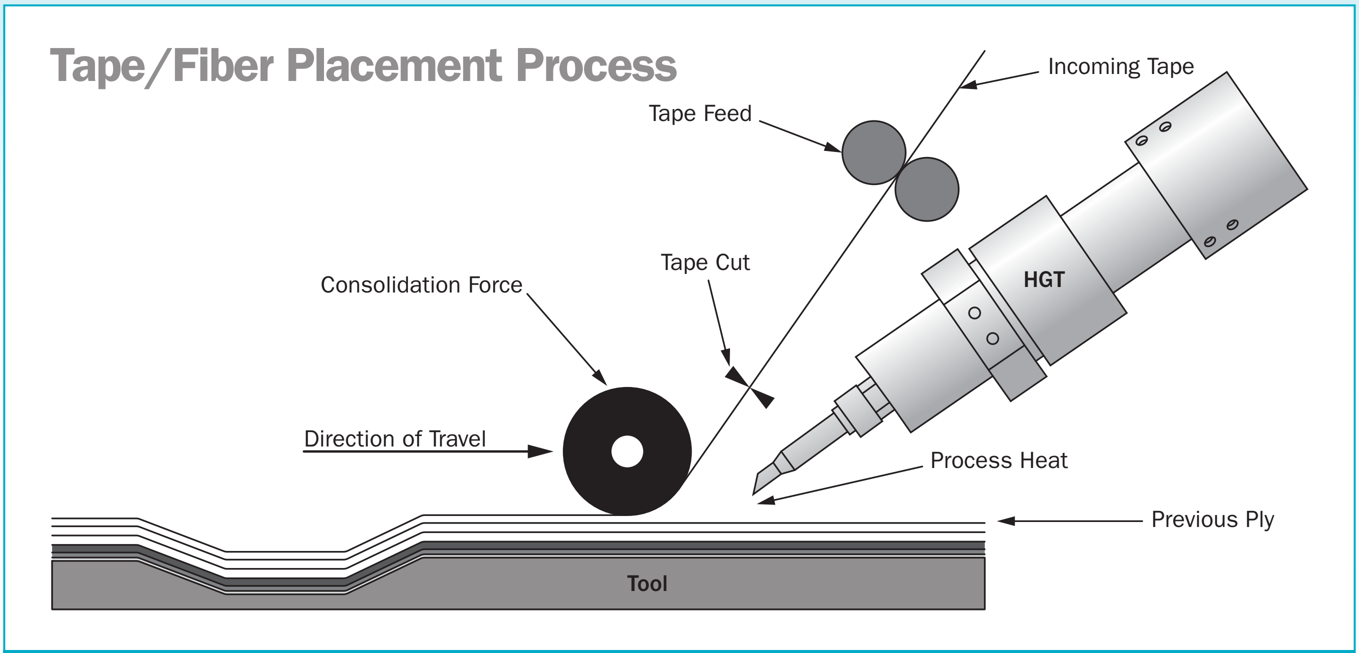

Figure 2 - TP AFP Process illustration with a Hot Gas Torch (HGT)

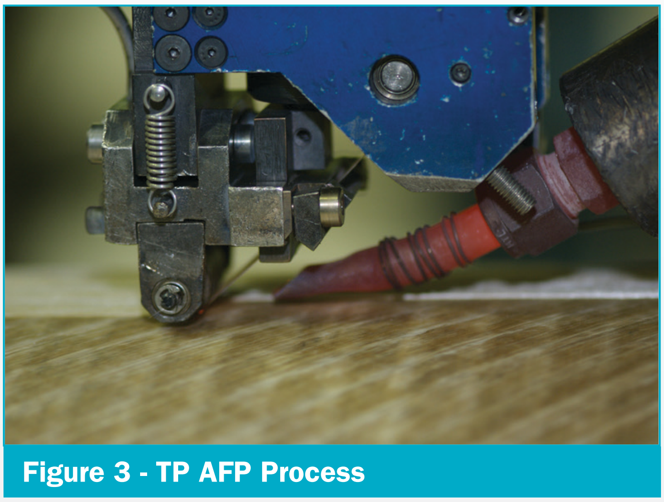

Figure 3 - TP AFP Process

Much of the early development was done in the United States under Advanced Research Projects Agency (ARPA) for the Manufacture of Advanced Composite Submarine Structures (MACSS) program.

There were three groups that worked to develop TPC AFP technologies in support of this effort:

- Trelleborg Sealing Solutions/ICI Composite Structures (now Cytec)
- DuPont
- McDonnell Douglas (now Boeing)

The Trelleborg Sealing Solutions/ICI team used the hot gas technology previously developed by Automated Dynamics and shown in the illustration above. DuPont used a similar approach, but used IR and flame torches as illustrated below. Their design got progressively more complex as the years went on.

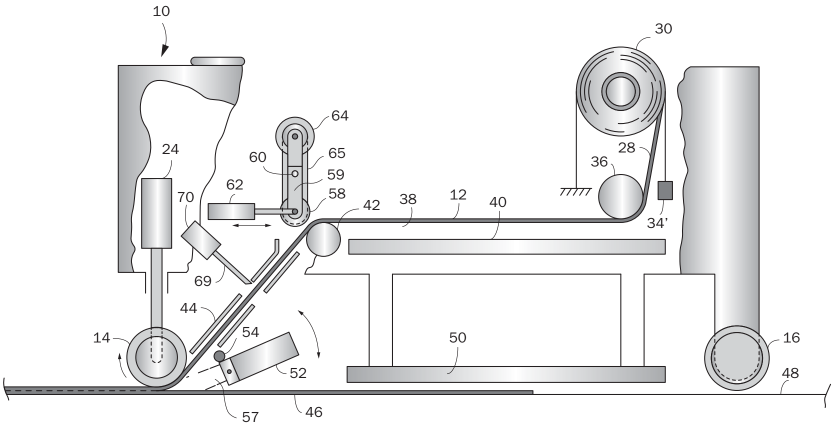

US Patent 4,714,509 DuPont (Mark Gruber) filed July 2, 1984

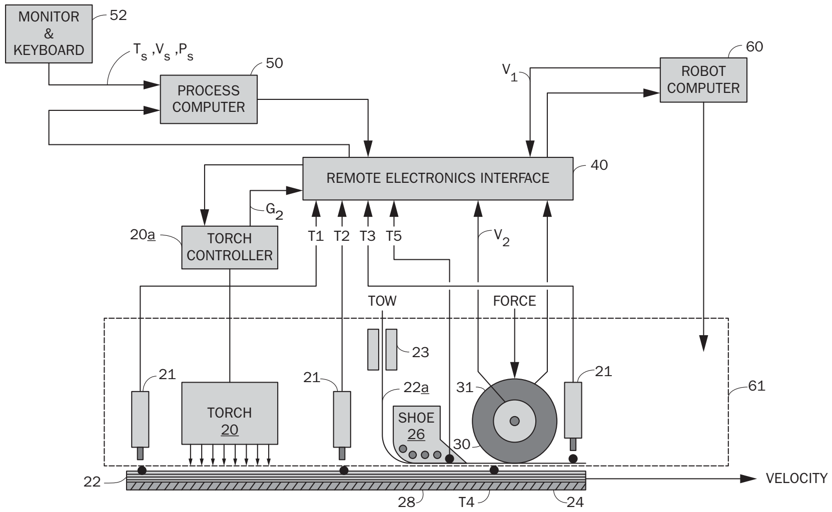

US Patent 5,160,568 DuPont (Mark Gruber) filed Feb. 1, 1991

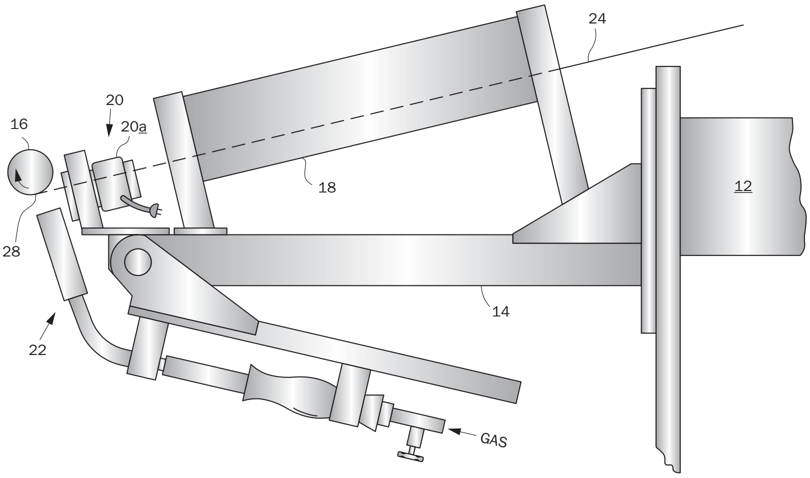

US Patent 5,447,586 DuPont (Albert Tam) filed July 12, 1994

Figure 4 - Early TPC AFP patents by DuPont

McDonnell Douglas (now Boeing) experimented with laser heating and developed a very sophisticated diode laser heating system that was later spun off by John Haake as Nuvonyx (later purchased by Coherent).

This ARPA program was a pioneering effort that demonstrated the promise of TPC AFP and revealed challenges for the future. Trelleborg Sealing Solutions has continued development of this technology and has used it in serial production of high performance composite structures for over 25 years.

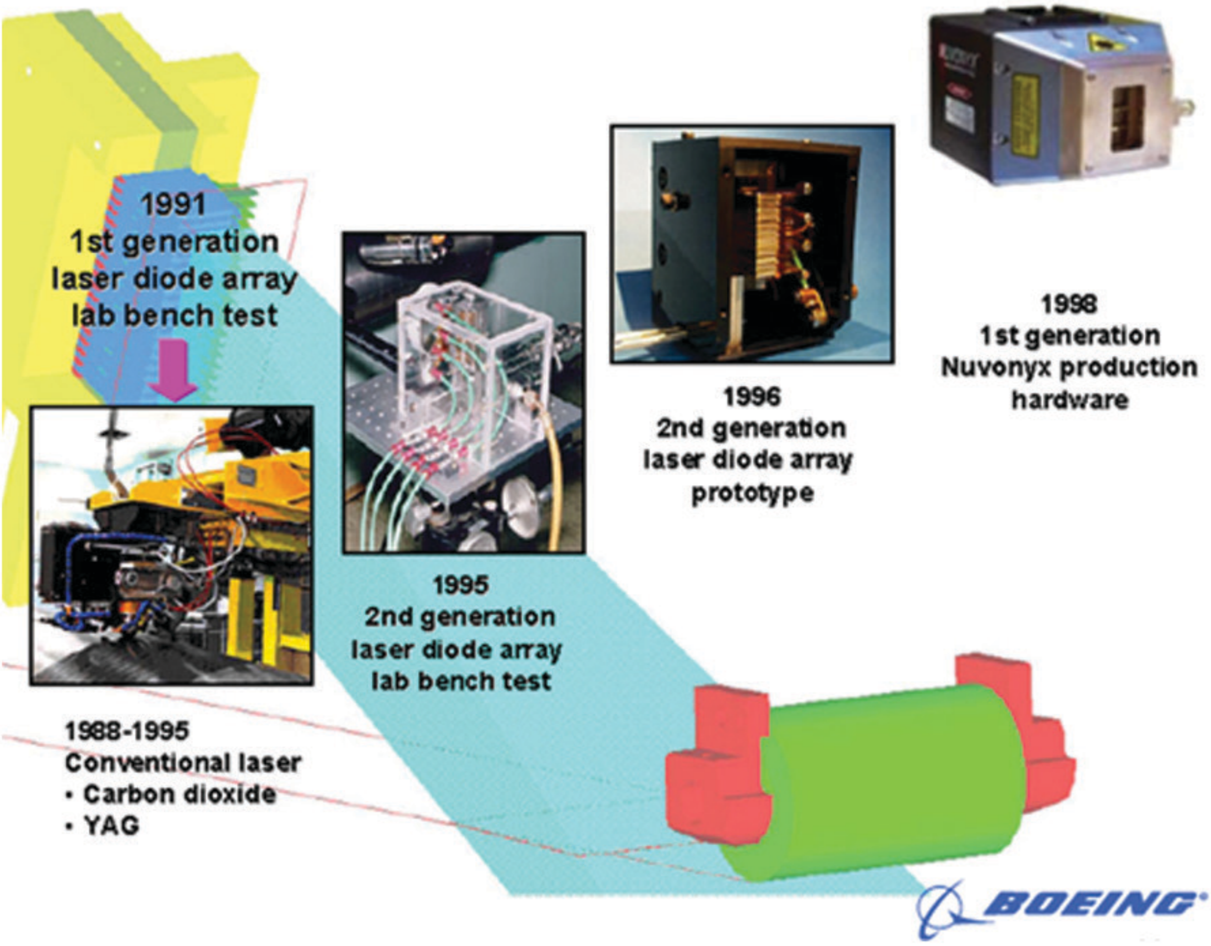

Figure 5 - Diode heating technology for TPC AFP developed by Boeing

2.2.1 State-of-the-Art: Misconceptions vs. Reality Concerning TCP AFP

There have been several papers published in recent history that claim in-situ TPC AFP is not a viable process because the process speed must be slow in order to achieve consolidation.

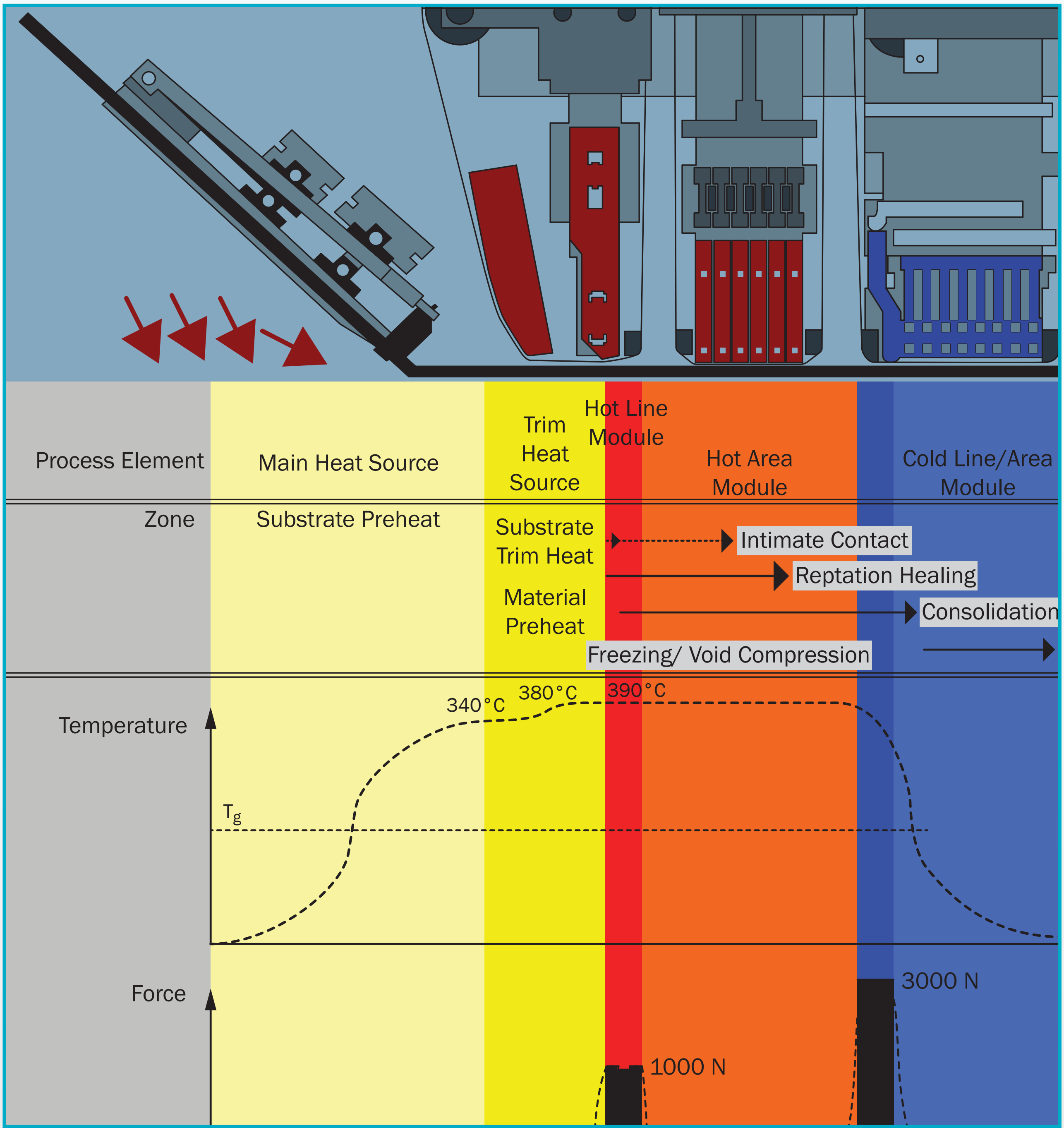

Figure 6 - Continuous autoclave style process

This misconception derives from classical polymer bonding (reptation) theory originally suggested by de Gennes. The general concept is that melt bonding of polymer surfaces (including TPC prepreg) involves three stages – intimate contact, molecular diffusion (reptation or autohesion), and consolidation.

Intimate contact involves bringing the two surfaces together under heat and pressure such that the polymer matrix of each surface is in direct contact. Once intimate contact is achieved the polymer chains diffuse between the two layers via thermal vibrations and entangle to form a bond. Finally the bond zone is cooled under pressure and a cohesive (TP fusion) bond is achieved. The general perception is that in-situ consolidation must proceed according to classical reptation theory as realized in autoclave or press consolidation. Indeed, if one takes this approach for TPC AFP you would end up with a long soak time that demands a slow process rate and large mechanism as illustrated in Figure 6.

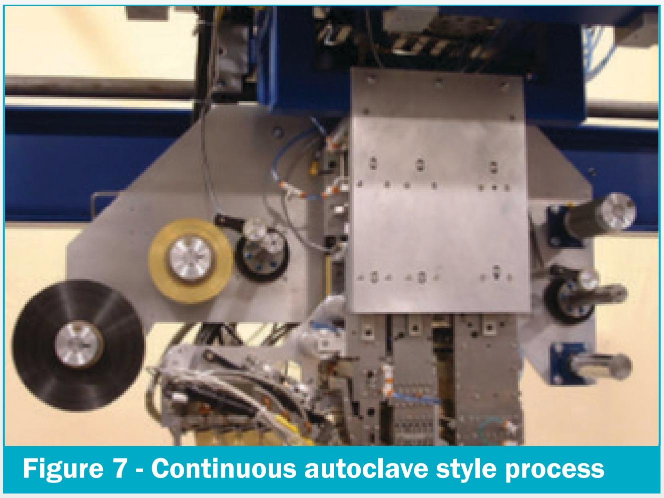

Figure 7 - Continuous autoclave style process

The process Trelleborg Sealing Solutions and others employ for TPC AFP relies on a small Heat Affected Zone (HAZ) to heat and bond the incoming tape to the laminate with a single compaction device. This allows for a compact head design providing the ability to fabricate complex structures.

The IR image in Figure 8 shows the Trelleborg Sealing Solutions hot gas process in operation. The image is of the nip region from the point of view of the "Process Heat" arrow in Figure 2. Notice in the Figure 8 that the prepreg tape in the nip region is heated to around 500 °C using heated nitrogen that is 975 °C (not visible in the IR image). The relatively small HAZ demands high energy input in order to bring the surfaces up to the desired temperatures quickly to enable high process throughput.

High pressures are not required, as several studies have shown that pressure is the least important of the primary bond parameters of temperature, pressure and time (process speed) for interfacial bond strength, although there is a correlation to reduced void content with higher pressure in at least one model. This void reduction with higher peak pressure has been verified by Trelleborg Sealing Solutions and is currently employed for low void structure processing. The short time in which the bond zone is maintained under the compaction device at high throughput rates does not allow as much time for polymer chain diffusion as classical reptation theory would predict for ideal bonding.

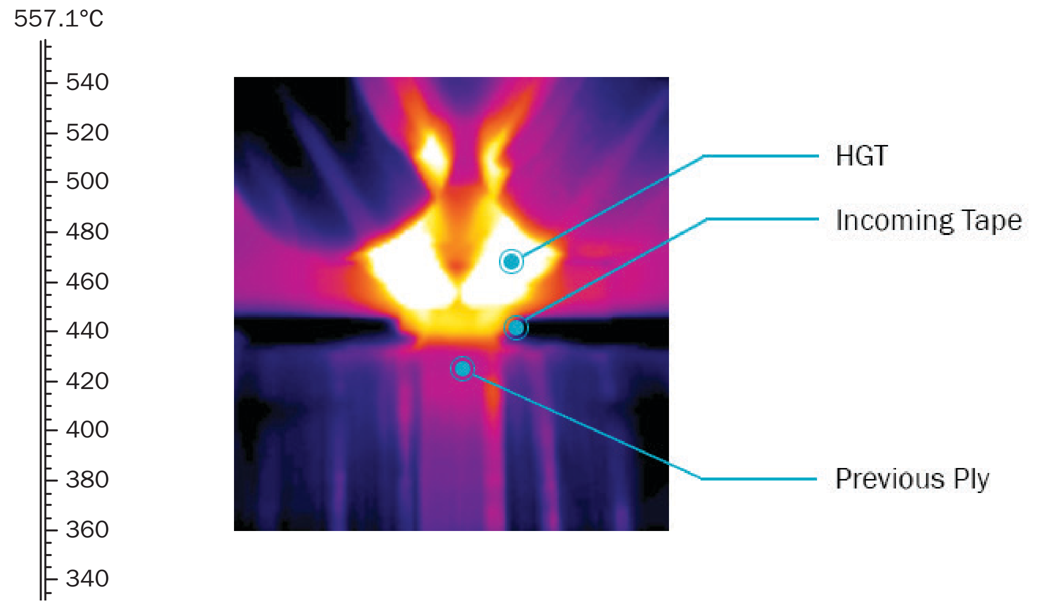

Figure 8 - Thermal image of TPC AFP, view into nip

However, these models have not incorporated all factors such as polymer shear thinning and squeeze flow due to the extremely rapid application of pressure which greatly increase polymer interdiffusion over the classical case of static surfaces in intimate contact. As George Box once said: "All models are wrong, some are useful." Models have not accurately reflected results that have been achieved for decades in serial production of TPC AFP structures.

For example, Nicodeau and Cinquin developed an elegant model for hot gas TPC AFP but claim less than ideal interfacial strength with the chosen macromolecular diffusion and "end life" (polymer degradation) criteria.

However, macromolecular diffusion is modeled as in autoclave processing and does not include shear thinning or polymer flow effects. Polymer degradation is likewise overstated. For example, DeVries claims a maximum processing temperature of 400 °C.

However, TGA data for neat PEEK show no degradation until at least 500 °C in nitrogen or air (typical TPC AFP uses an inert environment such as nitrogen) over a scan time of minutes. Thermoplastic Composites show higher resistance to thermal degradation as illustrated in the data below for carbon/PEEK.

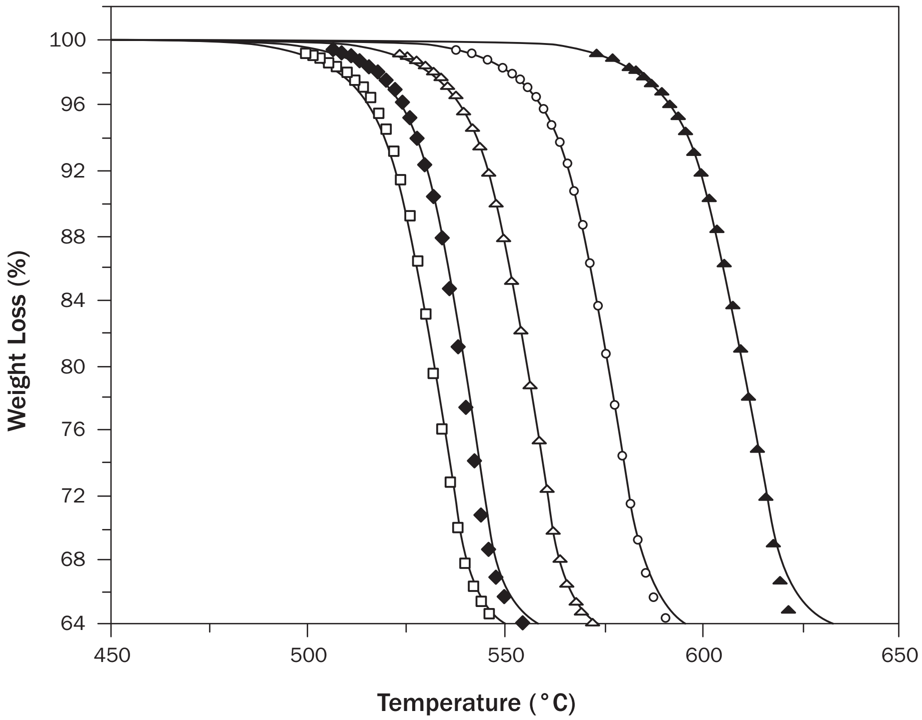

Figure 9 - Degradation data for carbon/PEEK showing higher temperature capacity at higher process rates

Figure 9 shows higher temperatures are achievable without thermal degradation at faster processing rates. The curves in Figure 6 vary from less than 1 °C/min (squares) to 20 °C/min curve. (solid triangles) whereas modern laser heated in-situ TPC AFP heating rates can be greater than 1,500,000 °C/min.

Even though the data indicate no degradation at much higher temperatures, Trelleborg Sealing Solutions processes carbon/PEEK at temperatures less than 500 °C to minimize any possibility of polymer degradation. Another important feature of a small HAZ is low residual stress.

Unlike autoclave or press consolidated laminates, in-situ TPC AFP structures are consolidated one layer at a time. Coefficient of Thermal Expansion (CTE) effects are limited to the HAZ and are thus distributed through the thickness of the laminate rather than concentrated at the surfaces.

This is particularly important for thick laminates, such as flywheels. In semicrystalline polymers, it is generally advantageous to achieve a high degree of crystallinity to improve solvent resistance and reduce creep at the cost of lower ductility.

It would seem apparent that the rapid cooling as the laminate leaves the HAZ would result in low crystallinity in semi-crystalline polymers such as PEEK. However, crystallinity of 25% to 30% is achieved in the first layer, and can be as high as 34% in the laminate as subsequent plies raise the temperature in the laminate enough to promote further crystallization. Thus it is possible to achieve crystallization levels approaching the maximum crystallinity level "of 37% at many hours at the ideal crystal growth temperature" with in-situ TPC AFP.

2.2.1 Current Developments: Laser Heating

Hot gas heating as developed by Trelleborg Sealing Solutions in the 1980s has been the industry standard due to its low cost and wide process window. Alternate heating methods such as flame, ultrasonic, broad spectrum IR, induction, and laser have been tested by Trelleborg Sealing Solutions and others. The most promising is laser heating due primarily to its high energy density, efficiency, and rapid response time.

This was understood in the early work by McDonnell Douglas in the MACSS program in the 1990s but was not pursued. High energy lasers are now economically feasible due to modern solid state diode and fiber lasers and are widely accepted in the metalworking industry.

With laser heating, the temperature in the bond zone can be precisely controlled in real time as in Figure 11. Molecular diffusion (entanglement) can be achieved without long soak times, and compaction pressure can be maintained throughout the bond cycle even at high process rates.

Dr. Wouter Grouve of University of Twente/TPRC has reported a 100% improvement in fracture toughness over press molded carbon/PPS prepreg using Laser Assisted Tape Placement (LATP), a similar approach to Trelleborg Sealing Solutions.

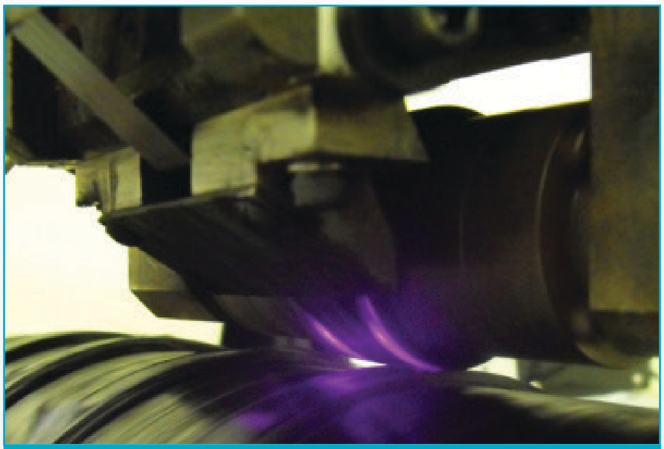

Figure 10 - Laser heating in TPC AFP

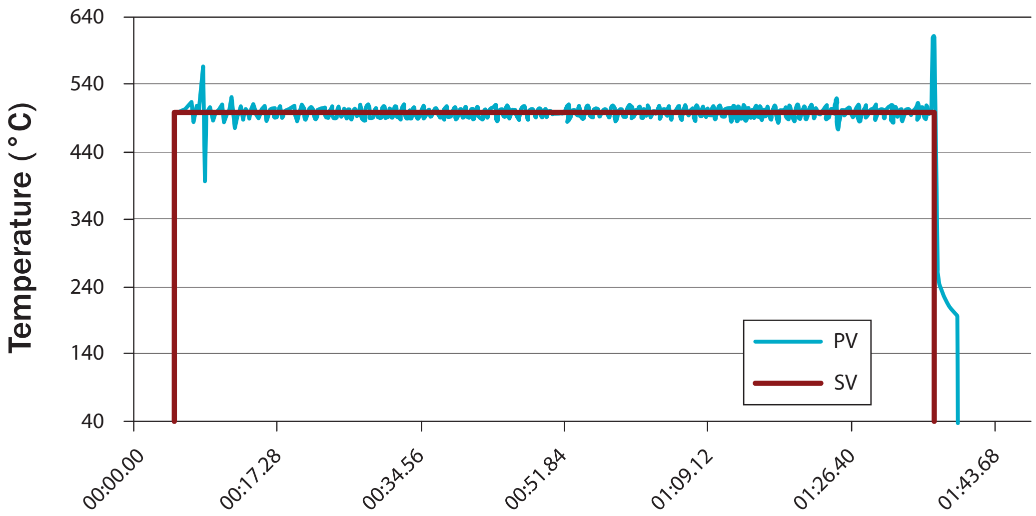

Figure 11 - Surface temperature in nip during laser in-situ TPC AFP

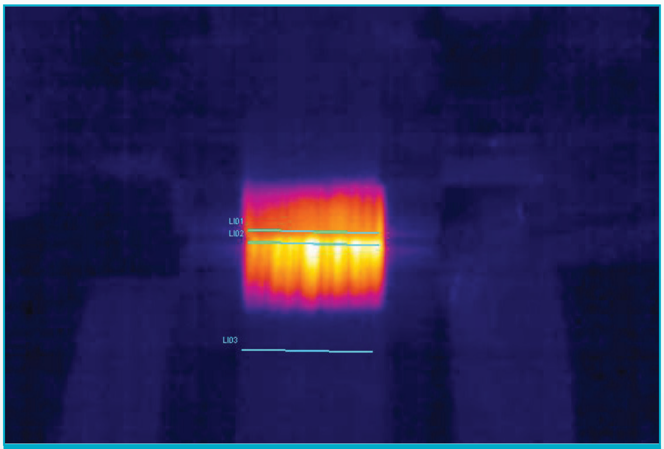

Figure 12 - IR image of HAZ during laser TPC AFP

The temperature in the HAZ can be precisely controlled because the 1064 nm laser wavelength does not interfere with the IR temperature sensor. The laser energy can be adjusted in milliseconds to correct for varying process conditions to achieve fully closed loop control of the composite surface temperature.

Furthermore, a complete process temperature history can be recorded, significantly reducing the process validation testing required when qualifying a new part program. The result of accurate and repeatable process temperature control is predictable laminate performance for a variety of geometries.

Figure 13 below shows the effect of increasing processing speed on the short beam shear strength (ASTM D2344) of a standard test specimen. Note that HGT heating is not practical above about 150 mm/sec although recent improvements in prepreg (raw material) have yielded improved performance at up to 200 mm/sec.

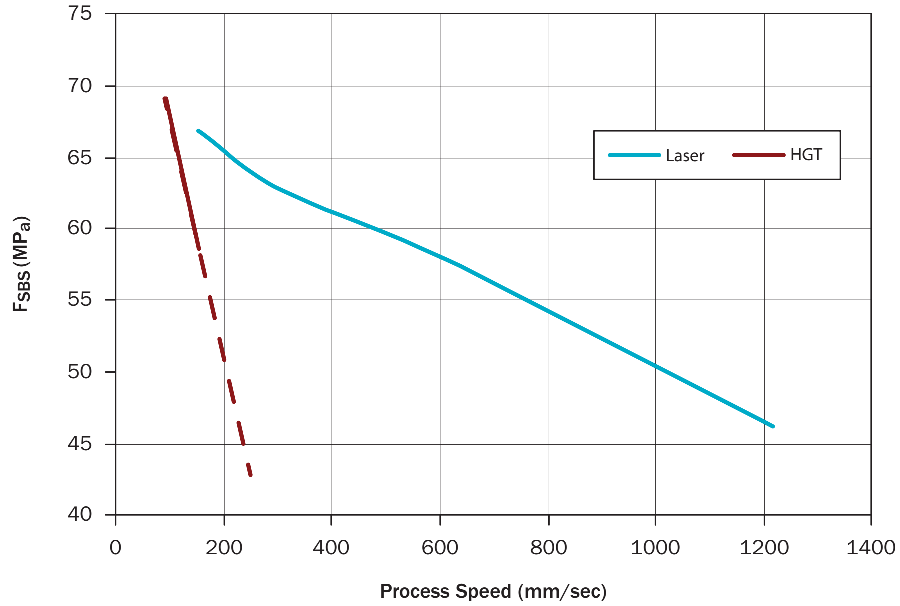

Figure 13 - Short Beam Shear as a function of Heating Method and Processing Speed (AS4/PEEK)

Although laser heating was developed for TPC AFP, the precise temperature control in the HAZ is finding applications in thermoset AFP. The demands are much less stringent for thermoset AFP because of the much lower temperature requirements, but the ability to measure and control temperature in real time at the nip point can be challenging. Trelleborg Sealing Solutions can provide this capability with our current thermoset AFP workcells and is currently working with other AFP vendors to provide laser heating as an option.

3. SERIAL PRODUCTION USING IN-SITU TPC AFP

Even without recent technological advances, TPC AFP has been used in serial production of composite structures for over 30 years. These applications include industrial, oilfield, fluid handling, aerospace, and military. Trelleborg sealing solutions produces over 5,000kg of PEEK composite structures every year using in-situ TPC AFP, providing much better process control and monitoring over existing IR and hot gas heaters.

A simple example of the widespread application of TPC AFP is the pipes shown in Figures 1-3 and Photos 1-12. TPC AFP is used in-line with extrusion to reinforce the bell on corrugated pipe. These pipes are in production throughout the world. The collage of photos below illustrates some of the many applications for in-situ TPC AFP.

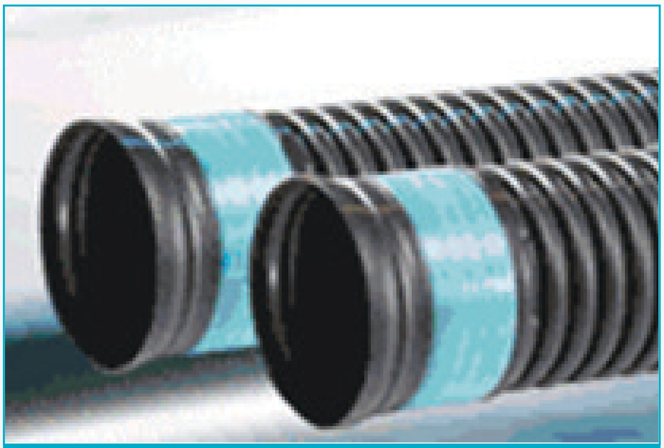

Figure 1 - In-situ TPC AFP drainage pipe

Figure 2 - In-situ TPC AFP drainage pipe

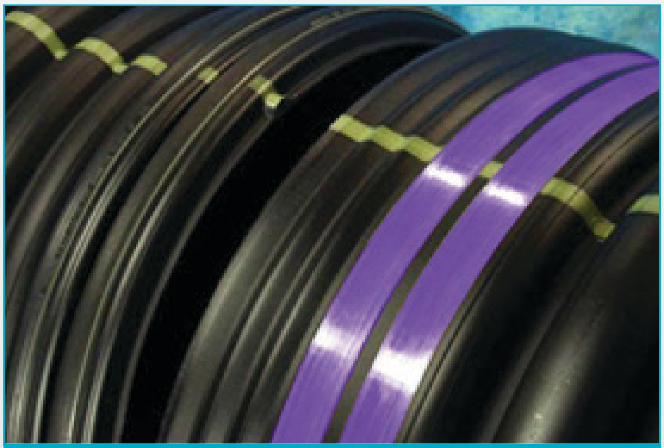

Figure 3 - In-situ TPC AFP drainage pipe

Photo 1 - In-situ TPC AFP S2/PEEK oilfield stru.

Photo 2 - In-situ TPC AFP S2/PEEK oilfield stru.

Photo 3 - In-situ TPC AFP S2/PEEK oilfield stru.

Photo 4 - In-situ TPC AFP S2/PEEK oilfield stru.

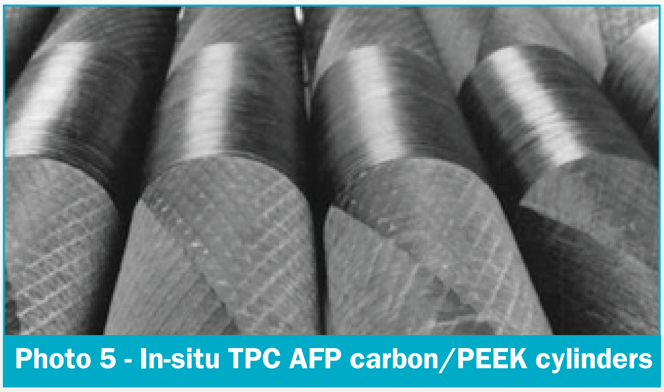

Photo 5 - In-situ TPC AFP carbon/PEEK cylinders

Photo 6 - In-situ TPC AFP carbon/PEEK cylinders

Photo 7 - Composite/metal joints

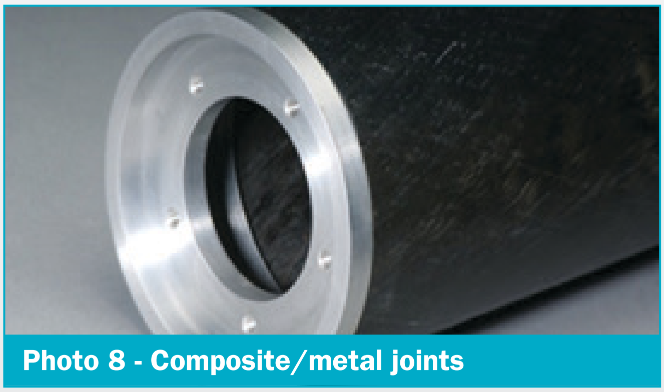

Photo 8 - Composite/metal joints

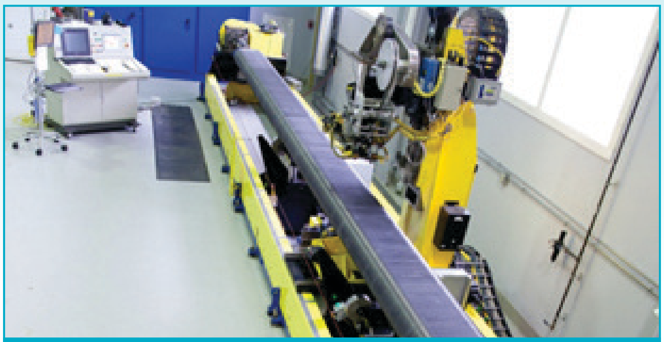

Photo 9 - Largest part we manufacture - 10M in length

Photo 10 - Completed railgun fabrication for BAE

Photo 11 - Projectile being fired by electromagnetic powered railgun

Photo 12 - Laser processing of CF/PEEK

SUMMARY

In-situ TPC AFP is an additive manufacturing process for high performance composite structures. It is a true Out-of-Autoclave (OoA) process that has been used in serial production for over 25 years. It behooves scientists and engineers to closely examine processing techniques for TPCs due to their numerous mechanical, chemical and thermal benefits.

Classical modeling of in-situ TPC AFP as static surfaces in contact for long periods of time, as in an autoclave, leads to misconceptions about the true capabilities of this technology.

Rather, the in-situ process represents a highly dynamic system with multiple avenues of affecting a high quality bond. Research efforts are underway around the world to improve process models and expand process capabilities using synergistic technologies such as lasers and ultrasonics.

These technologies will take advantage of previously unknown aspects of in-situ TPC manufacturing to greatly expand the applicability and acceptance of TPC AFP.

References

Kemmish, David J. and Leach, David C., "Poly (aryl ether ketone) matrix resins and composites", Wiley Encyclopedia of Composites, July 20, 2012.

Sharp, R., Holmes, S., Wodall, C., "Material Selection/Fabrication Issues for Thermoplastic Fiber Placement", Journal of Thermoplastic Composite Materials, vol. 8 No. 1, 1-14, Jan. 1995

de Gennes, P. G., "Reptation of a Polymer Chain in the Presence of Fixed Obstacles", J. Chem. Phys. 55, 572 (1971)

Hulcher, A. B., Lamontia, M. A., et al., **"Conformable compaction system used in Automated Fiber Placement of large composite aerospace structures"**, NASA Marshall Space Flight Center, ED34, Al, USA, 2004.

Coiffier-Colas, C., et al., "Automatic Thermoplastic Lay Up Process for Double Curvature Structures", Long Beach USA, Figure 12b, SAMPE 2005.

Mondo, J., & Parfrey, K., "Performance of in-situ Consolidated Thermoplastic Composite Structure", Fig. 2, SAMPE October 1995.

Tierney, J., & Gillespie Jr., J., "Modeling Heat Transfer and Void Dynamics for the Thermoplastic Composite Tow-placement Process", J. Composite Material, Vol. 37, Fig. 16, No. 19/2003.

Nicodeau, C., et al., "In-Situ Consolidation Process Optimization for Thermoplastic Matrix Composites", SAMPE 2006, Long Beach, CA, April 30 - May 4, 2006.

DeVries, H., "AFP Technologies for High Performance Thermoplastics: Characterization of Mechanical Performance and Output Rate", SETEC Leiden – 06th SAMPE International Technical Conference, September 14-16, 2011.

Nam, Jae-Do and. Seferis, James C, "Generalized Composite Degradation Kinetics for Polymeric Systems Under Isothermal and Nonisothermal Conditions", Journal of Polymer Science, Part B:Polymer Physics, Col. 30, Issue 5, PP 455-463, April 1992.

Tierney, J. & Gillespie Jr., J., "Crystallization Kinetics behavior of PEEK based composites exposed to high heating and cooling rates", Composites: Part A 35 (2004) 547-558, Elsevier

Tierney, J. & Gillespie Jr., J., **"Crystallization Kinetics behavior of PEEK based composites exposed to high heating and cooling rates"**, Composites: Part A 35 (2004) 547-558, Elsevier.

Grouve, Wouter, **"Weld Strength of laser-assisted tape-placed thermoplastic composites"**, PhD Thesis, University of Twente, Enschede, the Netherlands, ISBN 978-90-365-3392, August 2012.

Trelleborg is a world leader in engineered polymer solutions that seal, damp and protect critical applications in demanding environments. Its innovative solutions accelerate performance for customers in a sustainable way.

Trelleborg Sealing Solutions is a leading developer, manufacturer and supplier of precision seals, bearings and custom-molded polymer components. It focuses on meeting the most demanding needs of aerospace, automotive and general industrial customers with innovative solutions.

WWW.TSS.TRELLEBORG.COM

facebook.com/TrelleborgSealingSolutions
twitter.com/TrelleborgSeals
youtube.com/TrelleborgSeals
linkedin.com/company/trelleborg-sealing-solutions

If you'd like to talk to Trelleborg Sealing Solutions, find your local contact at: www.tss.trelleborg.com/worldwide

Version no. 99GBPXWPAXE1219