TRELLEBORG

Trelleborg Antivibration Solutions

INDUSTRIAL PRODUCT PORTFOLIO

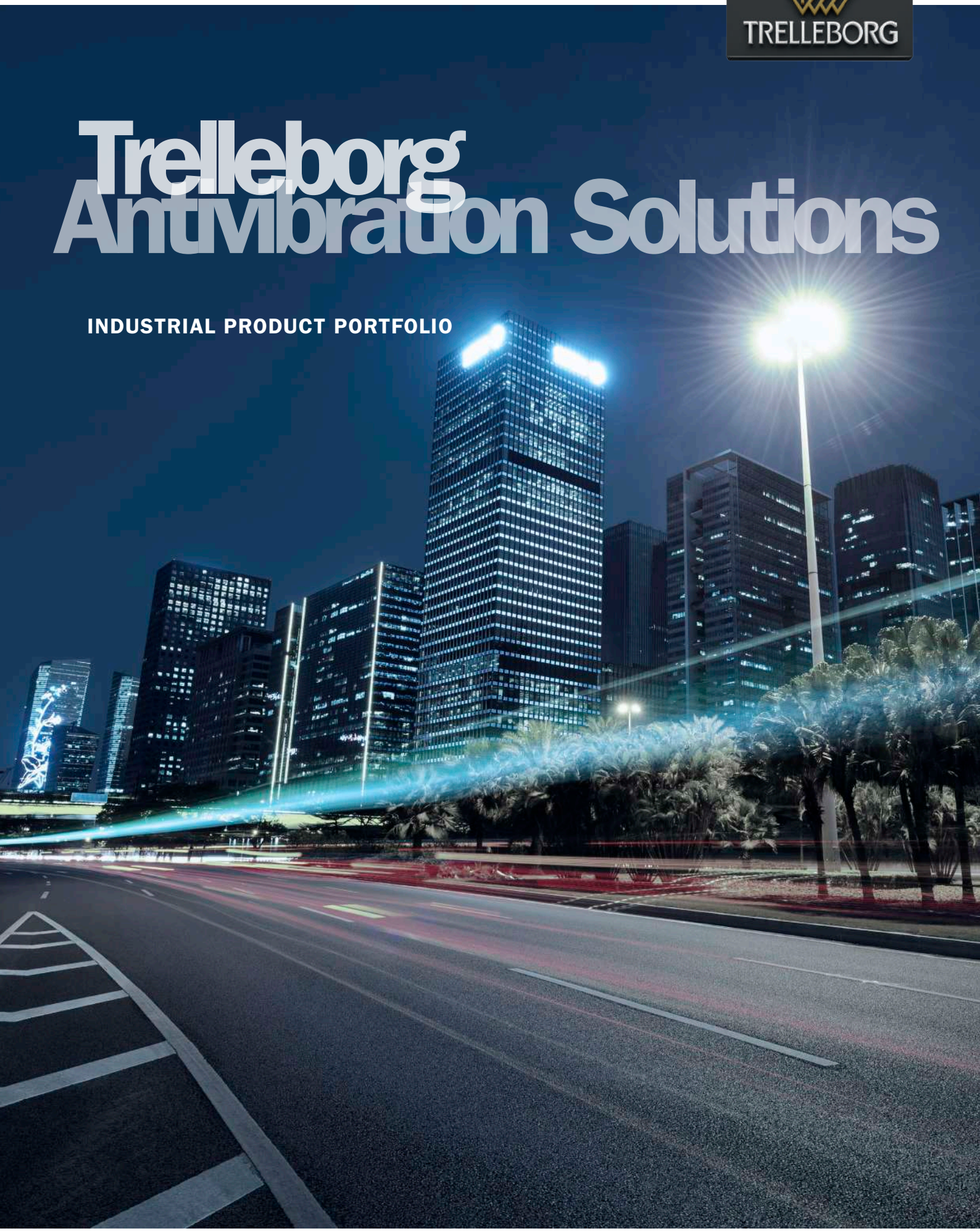

On the frontline of innovation

Noise, impact and vibration of machinery causes damage to equipment and discomfort to people – whether they're travelling or working. A global specialist in polymer engineering, Trelleborg Antivibration Solutions supply market-leading solutions which minimize these effects and deliver improvements people can physically feel. Passengers feel more comfortable. Workers feel better protected. And businesses feel the confidence that comes from partnering a world-class manufacturer.

We understand your challenges and work with you to develop compliant and customized solutions which enhance environments, extend service life and reduce downtime, maintenance and long-term cost of ownership. It's a difference you can truly feel across your operations, and in your brand reputation.

Welcome to the frontline of industrial innovation. Welcome to Trelleborg.

CONTENTS

Choice, expertise, availability.

– AND EASY TO DO BUSINESS WITH

Our market-leading range of high quality solutions are fully tested and compliant with all international standards. The breadth and depth of our global service and support network means we're accessible in all territories. Our technology offers sustainability environmentally and operationally. And from design and testing through to installation and training, we'll work with you to optimize your application. In terms of choice, quality, support and logistics, we offer a complete, end-to-end service. We don't just make life feel better. We make it feel easier, too.

Our capabilities cover:

- **Solutions against vibration.** Our vibration isolation technology and solutions takeaway the stress caused by vibration to protect your investment and create safer and better places to work
- **Solutions against noise.** Our range of passive and active systems protect people in even the most challenging environments, ensuring both their safety and the continued operation of machinery
- **Solutions against shock.** Our range of products and services protect people, equipment and buildings from damaging impacts caused by drops, collision, explosion and even seismic activity.


Visit our website

The use of rubber as a spring material

Vibration isolation is based on installing machinery on springs or resilient material of known stiffness and damping.

The types of spring material which are used most often are rubber and steel. Another alternative are air springs.

Rubber has high load bearing capacity with an ability to accommodate overload conditions without the catastrophic failures associated with steel and other materials. It can carry complex loadings more easily and economically than other alternatives.

The bonding of rubber to a rigid material creates a product, which can accommodate movement without any sliding or rotating surfaces that require lubrication. This allows operation in many harsh environments without concern and with substantially reduced maintenance requirements.

Components can be designed to integrate with the space limitations of the application and provide control in all six modes of freedom.

Steel springs are normally used in the form of coil springs or leaf springs. The benefit of these is that they permit relatively high deflections, but their disadvantage is that they provide very little damping. Due to this, excessive movement occurs when passing through the resonance range. Often special devices are installed in order to limit deflections.

Rubber springs however feature many unique characteristics such as high intrinsic damping which helps the designer keep vibration amplitudes to a minimum whilst simultaneously reducing high frequency structure borne noise.

To allow their properties to be fully utilized, Trelleborg AVS rubber mountings are available in various Hardness grades and polymer types.

Rubber as an engineering material

Compared with other engineering materials, rubber is very ductile. In some cases, the elongation may be higher than 500%, and by far the highest proportion of this strain is elastic. Metals, on the other hand, have very small strains below the elastic limit. Compared with metals, the tensile strength of rubber is low. The maximum level that can be achieved with rubber is 25-30 MPa. However, because of the high strain, rubber has a very large work absorption capacity compared with the best grade of steel.

If a material is subjected to a load below the elastic limit, the deformation will, according to Hooke´s law, be proportional to the load. This does not apply to rubber under tension or compression. This means that rubber does not have any constant tensile or compression modulus of elasticity. Metals will normally be softer towards the end of a tensile test, while the opposite is often the case with rubber. Rubber does not have a yield point, and the modulus is increased until there is abrupt failure.

High elasticity ductility

High elastic ductility is, therefore, the most pronounced feature of rubber. Just how easy it is to deform rubber is shown by the fact that the modulus of elasticity of compression for rubber within the normal Hardness range, 30-80° IRH, is between 2 and 12 MPa; while the modulus of elasticity of steel is 210,000 MPa, This means that rubber is about 100,000 times softer than steel.

Sound insulation

As sound-insulating material, rubber is one of the very best. The effect of sound insulation increases with the thickness of the rubber. Rubber is an excellent absorber of impact sound, which occurs in foundations, floors, buildings, etc.

Damping capacity

Damping capacity is an additional important feature of compound rubber. This is of particular importance when operating a machine that is supported on springs through the resonance range. In Fig.1 you can see the principle difference between an almost ideal spring and a rubber spring. The resonance deflection with rubber springs is only 1/5 to 1/50 compared with the deflection when using steel springs with the same stiffness, see Fig.2. With a spring made of natural rubber working with compression or shear load, the direct loss of energy is between 6 and 30% depending on the Hardness of the rubber. The energy loss is such that is it possible in many cases to use rubber springs as dampers. Care must be taken when it comes to damping in a rubber element. If the element works with high amplitudes, a substantial amount of energy is converted into heat, and the heat which is generated may cause the rubber element to be destroyed see Fig.3. In the case of simple impact, the vibration sequence will be as shown in Fig.4. The left-hand curve represents a steel spring, while the right hand curve represents a rubber spring. These two curves clearly show how quickly the vibrations degenerate in the rubber, while in the steel springs they diminish slowly.

Fig. 1

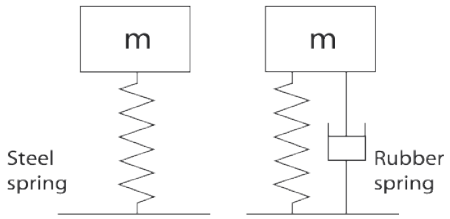

Schematic difference between rubber spring and steel spring

Fig. 2

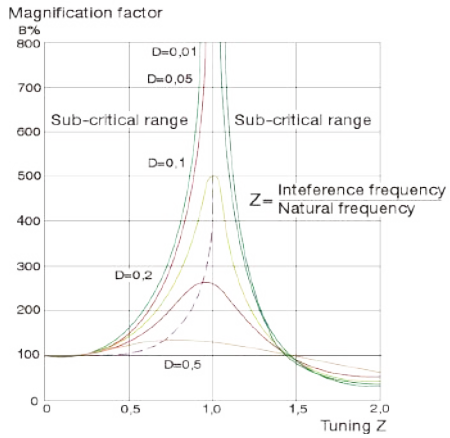

Resonance curve for spring material with different internal damping

Fig. 3

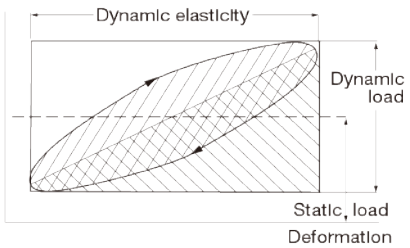

Schematic representation of the internal damping properties of rubber. The elliptical area indicates the loss of energy

Fig. 4

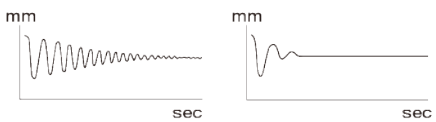

Vibrations sequence with single impact for steel and rubber springs

Environmental conditions

Trelleborg products are manufactured in a wide range of rubber compound types. A range of Hardness is available in each compound type to allow the required stiffness to be achieved. Each compound is carefully formulated to obtain the best performance for specific properties. The compound chosen depends upon the most important properties for the application's requirement. Strength and fatigue requirements, operating temperature, environmental conditions and potential contamination must be considered. Most Trelleborg rubber compounds are based on polyisoprenes, offering high strength and excellent performance characteristics. A range of synthetic rubber compounds is also available for special applications where resistance to continuous high temperatures (>75°C) or other harsh environmental conditions is required. Anti-oxidants and anti-ozonants are included in many formulations to provide resistance against ozone and ultra violet rays.

Static Stiffness

The stiffness of a spring is a measure of applied force (P) against a resulting Deflection (X). Measurements taken at a continuous feed rate (usually in the order of 1mm/sec velocity) provide static (or pseudo static) characteristic.

The curves in Fig. 5 show alternative methods of determining stiffness.

Fig. 5

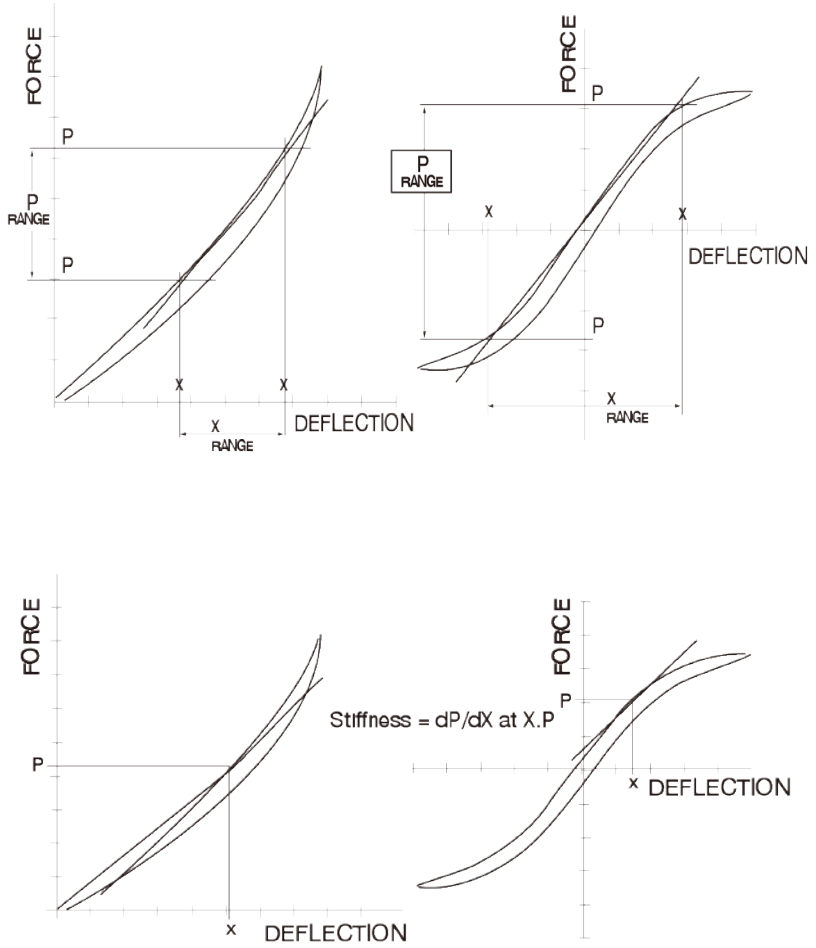

dP/dX at XP average gradient over P (or X) range
(usually derived by least squares method of curve fitting)

Typical Compound Properties

COMMERCIAL NAME INTERNATIONAL DESIGNATION	BUTYL RUBBER IIR	ACRYLONITRILE BUTADIENE RUBBER NBR	NATURAL RUBBER NR
Hardness range IRH	45 - 70	40 - 70	35 - 80
Temperature range	-40 to + 120°C	-40 to + 130°C	-40 to + 70°C
PROPERTIES			
Creep performance	Moderate	Moderate	Good
Fatigue performance	Good	Moderate	Very Good
High temperature performance	Good	Good	Moderate
Low temperature performance	Good	Good	Good
Physical strength	Good	Good	Excellent
RESISTANT TO			
Acids	Very Good	Conditional	Conditional
Oil and greases	Not Suitable	Excellent	Not Suitable
Ozone	Very Good	Moderate	Moderate
Petrol	Not Suitable	Excellent	Not Suitable
Solvents, Aliphatic	Not Suitable	Very Good	Not Suitable
Solvents, Aromatic	Not Suitable	Conditional	Not Suitable
Solvents, Halogen	Not Suitable	Bad	Not Suitable
Water	Good	Good	Good
Durability	Good	Very Good	Very Good

Dynamic Stiffness

The stiffness of a rubber spring changes when a dynamic force is applied. This is known as the dynamic (or complex) stiffness. The dynamic stiffness is usually higher than the pseudo-static stiffness, (the difference being referred to as the dynamic to static ratio) and is affected by several factors including changes in frequency, temperature and amplitude. See Fig. 6.

The dynamic stiffness is considered to be unchanged between 5Hz and 80Hz under constant conditions. Above this frequency range, the dynamic stiffness of the spring will deviate from the ideal 'massless' spring stiffness. This is due to the mass effects of standing waves. "Wave effect" changes of dynamic stiffness are generated when the rubber section dimensions become comparable with multiples of the half wavelength of the propagated wave passing through the spring. Calculations of the deviation from ideal "massless" spring dynamic stiffness due to wave effect are complex and are normally obtained from test measurement. A typical stiffness curve for a large section rubber to metal bonded spring is shown across In Fig. 7.

Fig. 6

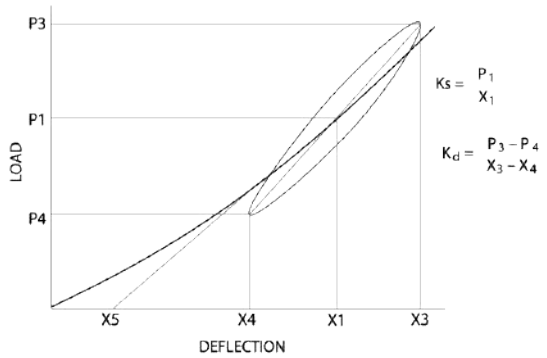

Fig. 7

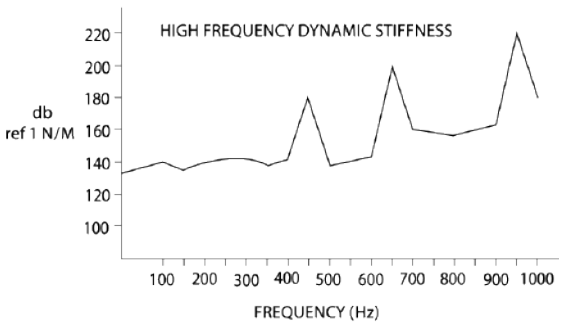

Creep Performance

When a rubber spring is subjected to a constant load, the resultant deflection continues to increase with time. An example of creep that occurs in a pair of inclined springs is shown on the graph in Fig. 8. A typical creep characteristic for rubber used in antivibration mountings is 3-5% per time decade.

Fig. 8

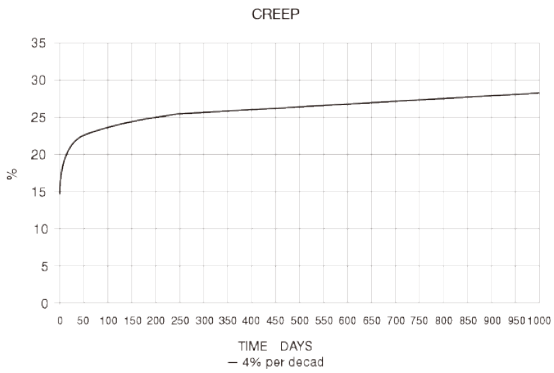

Gough-Joule Effect

Changes in temperature cause small changes in the deflection of loaded rubber springs. This change in deflection, which is reversible with temperature, is known as the Gough-Joule effect. For pairs of springs (Fig.9) shown a 10°C rise in temperature will cause an increase in clearance by approximately 4.5% of the nominal static deflection. See Fig.10.

Fig. 9

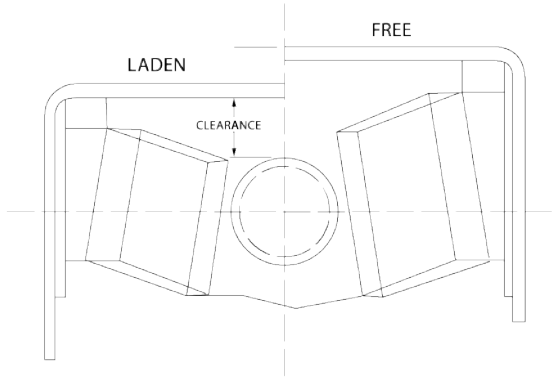

Stiffness of a Rubber Spring

When calculating compression characteristics of rubber, it should be noted that the deflection is not directly proportional to the load, as the modulus of elasticity in compression increases with the degree of stress. The modulus of shear, however, remains constant for normal stresses.

The factor with the most effect on stiffness is the ratio between loaded and free surface area of rubber. This is the so-called shape factor (often designated S). With thin rubber sections, a very high modulus of elasticity can be achieved. In another respect, the stiffness of a rubber spring is determined by the dimensions and the Hardness of the rubber.

Fig. 11 illustrates the relationship between rubber Hardness and shear modulus, and Fig. 12 the dependence of the bulk modulus on the shape factor. The latter curve applies at 10% deformation.

The curves show that rubber at a shape factor of 0.25 for shear is about 6-8 times softer than compression for the same rubber Hardness. Since only 3-4 times the stress value in compression can be considered, it may be said that rubber is best used in shear to achieve large deflections and good isolation properties, particularly at low interference frequencies.

Fig. 10

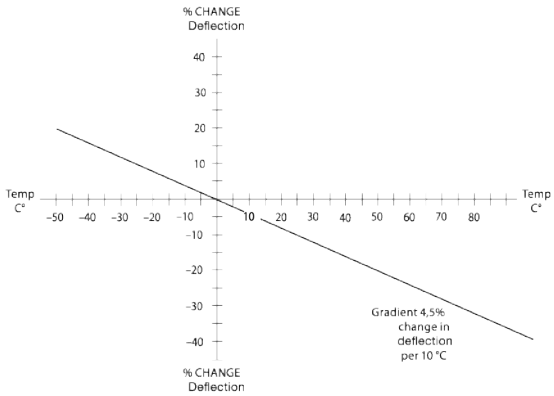

Selecting an antivibration mount

The principle relating to vibration isolation with springs is that they are placed between the machine and the base or plinth. To ensure effective isolation, the springs must be selected carefully, otherwise the result could be impaired performance. In favourable cases, the transmitted force can be reduced to only 2 or 3% of that of a rigidly mounted machine. In such cases, the vibrations are practically eliminated.

Fig. 11

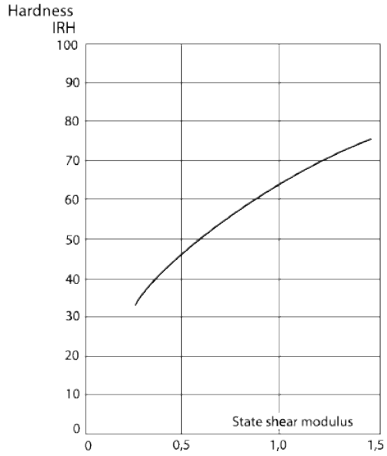

Relationship between rubber Hardness and shear modulus

Fig. 12

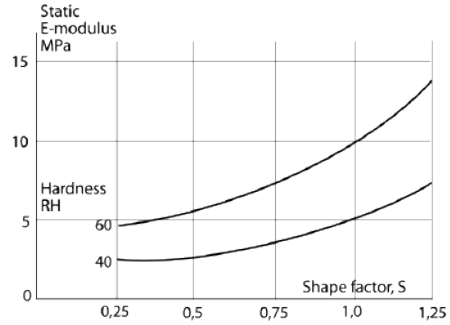

The dependence of the compression modulus upon the shape factor

	SYMBOL	MEASUREMENT	DESCRIPTION
AMPLITUDE	A	(m)	The magnitude of the displacement of a vibration deflection from the mean position. The total vibration is thus twice the amplitude.
INTERFERENCE FREQUENCY	f	(Hz)	Is essentially the same as the frequency of the rotational speed of the machine or a harmonic.
FREQUENCY	f_o	(Hz)	The number of vibrations in a freely-oscillating system per unit of time.
MASS	m	(kg)	The mass of the oscillating system.
SPRING FORCE	F	(N)	The force emanating from a spring on the machine or the reverse.
DEFLECTION	d	(m)	The deformation of the spring from the neutral position.
STATIC SPRING STIFFNESS	Kstat	(N/m)	The force required in Newtons to compress the mounting 1 m.
DYNAMIC SPRING STIFFNESS	Kdyn	(N/m)	Spring stiffness when an alternating force is applied.
TUNING RATIO	Z	(-)	The ratio between interference frequency f and natural frequency fo.
INTERFERENCE FORCE	Fs	(N)	The force transmitted to the base of an isolated machine.
IMPULSE FORCE	Fi	(N)	The force transmitted to the base of a rigidly mounted machine.
MAGNIFICATION FACTOR	B	(-)	The part of the impulse force which is transmitted as a vibration force. Indicates the relation between the interference force Fs and impulse force Fi.
LEVEL OF ISOLATION	I	(-)	The part of the impulse force which is eliminated by the vibration isolation, (1-B) or, if B is expressed as a percentage, (100-B).
DAMPING COEFFICIENT	C	(Ns/m)	The linear viscous damping coefficient.
CRITICAL DAMPING	Ckr	(Ns/m)	The linear viscous damping coefficient at critical damping. A system is said to be critically damped if it returns to its initial static position without any over-oscillation after a displacement.
DAMPING FACTOR	D	(-)	The ratio between C and Ckr.
REDUCTION	R	(dB)	Isolation expressed in decibels.
DEFLECTION	δstat	(mm)	The static deflection for a spring.

Calculations

Calculation of deflection

When calculating deflection the following formula shall be used.

$$\delta_{stat} = \frac{F}{K_{stat}}$$

Calculation of isolation degree

The following formulas are used for calculating the isolation degree for a given spring.

The natural frequency:

$$f_o = \frac{1}{2}\sqrt{\frac{K_{dyn}}{m}}$$

Tuning: $Z = f/f_o$

Magnification factor:

$$B = \frac{F_s}{F_i}\sqrt{\frac{1+4D^2Z^2}{(1-Z^2)^2+4D^2Z^2}}$$

The factor D depends on the internal damping of the spring material. In rubber D has the value 0.04-0.1 depending on Hardness of the rubber. The term $4D^2 \cdot Z^2$ can generally be neglected completely except in the resonance range, that is, when Z=1. If Z=1, that is, the machine speed (rpm) = the natural vibrations of the system, it is said that ther resonance, and the vibrations will be infinitely large if there is no damping.

Here, then, a rubber spring has a direct advantage over a steel spring, which has minor internal damping and in which the amplitude, in theory, grows to a very high value in the resonance point. Refer to Fig. 2 on page 7.

Isolation degree I=(1-B) or as percentage, I=(1-B)x100

Reduction in dB R=20log(1/B)

The relative magnitude of the transmission of force depends entirely on the tuning ratio Z. If Z is high, the force transmission percentage will be small.

Fig. 13

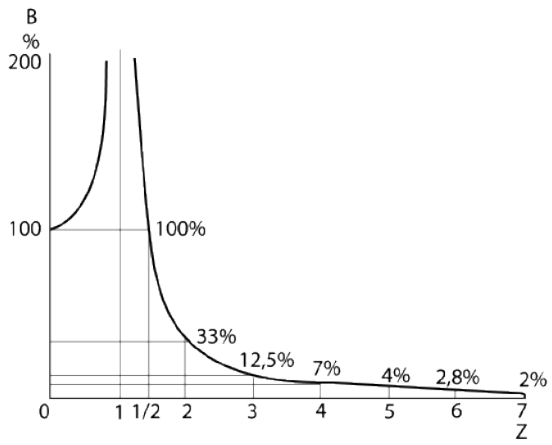

Resonance curve

As can be seen in Fig. 13, B at Z=√2 has dropped to 100% and when Z is further increased, B drops rapidly. Vibration isolation is therefore of significance first when the operating frequency considerably exceeds the natural frequency. For practical applications, Z should be between 3 and 5, which means that 88 - 96 % of interference forces are eliminated.

Generally, the operating speed of a machine (interference frequency) is given. If the system´s natural vibration coefficient can be modified, and influence Z, it is possible to change the force transmitted. This is exactly what happens when vibration isolation is achieved. The low elasticity and shear moduli of rubber are used to achieve a low natural frequency.

To summarize, transmission of vibration forces can be effected in three ways:

1. Rigidly mounted machines transmit vibration forces in unchanged form to the base, which is therefore forced to be a part of the movement of the machine. The magnification factor can be regarded as being 100%.

2. In the case of an unsuitable spring system, the magnification factors will increase considerably and may amount to several hundred percent.

3. The force transmission percentage is reduced substantially by correct calculation and suitable

mountings being installed between the machine and base. Typical reductions can be from 100 down to 10%, but in favourable circumstances can be as low as 2%.

All machines have more than one resonance point as, through many interacting movements, they can vibrate in different modes. The resonance points can be determined, but the methods of calculation are often difficult. Experience has shown that all resonance velocities that may arise do not need to be clarified. It is usually sufficient to calculate the more significant ones which can be determined easily. The desired level of isolation and the interference frequency determine where the resonance frequency shall be.

Shock isolation

Shock is usually described as a transient phenomenon as opposed to a vibration, which is a continuous process.

A shock pulse can normally be defined by parameters such as maximum amplitude (acceleration, for example), duration (in milliseconds, for example), and the shape of the pulse. The pulse may be a half sine wave, rectangular, saw tooth or other shape of wave.

The basic principle for achieving good shock isolation is to mount the machine on mountings that are soft enough to give a low natural frequency, and which can offer relatively large mounting deflections.

If the duration of a shock pulse is τ seconds, and the natural frequency of the set up is f_0 Hz, then the product must be τf_0 <approx. 0.25 if the isolation is to provide protection against the shock.

The value 0.25 is not an absolute value but depends on the shape of the shock pulse.

Storage

There may be changes in appearance and physical properties of rubber products during storage, particularly if adverse condition apply. ISO 2230 provides an ideal guide to the most suitable storage conditions, including:

- Moderate temperature (ideally 20°- 30°).
- Low humidity.
- Protection from intense light, radiation and high ozone concentrations.
- It is recommended that the storage period does not exceed five years.

Unit conversion

MULTIPLY	BY	TO OBTAIN
Feet	0.30480	Meters
Inches	0.02540	Meters
Pounds	0.453	Kilograms
Pound/Force	4.45	Newtons
Feet/Second	0.3048	Meters/Second
Inches/Second	0.0254	Meters/Second
Feet/Second^2	0.3048	Meters/Second^2
Inches/Second^2	0.0254	Meters/Second^2

Important Considerations

- Flexible connections to the machine are required in order to achieve effective isolation. The application of Trelleborg expansion joints can be recommended.

- If required, there should be grounding for removing static electricity.

Application guide

APPLICATION	TYPE OF MOUNT					
Stationary Installations Combustion Engines Compressors, Generators	 CUSHYFLOAT	 CUSHYFOOT	 M MOUNT	 RA/RAEM	 RAB	 VEE MOUNT
Mobile Installations Vehicle Engines, Compressors, Generators, Marine Engines	 CUSHYFLOAT	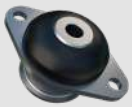 METACONE	 RA/RAEM	 VEE MOUNT		
Sensitive Equipment Electronics, Cameras, Fans, Small Pumps	 EQUI-FREQUENCY	 INSTRUMENT MOUNT	 LOW FREQUENCY	 M MOUNT		
Transit Protection Computers, Test Equipment	 BA MOUNT	 BARREL BEARING	 DOUBLE U-SHEAR	 M MOUNT	 VT MOUNT	
Vehicles Engines, Cabs, ROPS Cage	 CAB MOUNT	 EH MOUNT	 HYDRO MOUNT	 MDS MOUNT	 METACONE	 UH MOUNT
Instrument Mounts Electronic Racks, Radio TX/RX, Mobile Computer Systems	 BOBBINS	 INSTRUMENT MOUNT	 LOW FREQUENCY	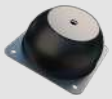 M MOUNT		
Heavy Duty Isolators Off Highway Vehicles, Vibratory Screens, Large Engines, Public Service Vehicles	 SAW RECTANGULAR	 SAW CIRCULAR	 SAW			
Building & Construction Inertia Blocks, Heavy Plant, Ductwork, Suspended Ceilings	 GK	 VT	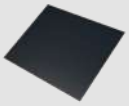 AV-PLATE			
Machine Tools Lathes, Punch Presses, Grinders, Woodworking Equipment	 TF	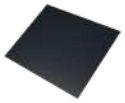 AV-PLATE				
Motion Control Re-Bound, Motion Limitation	 ANB	 BARREL BEARING	 BUFFERS	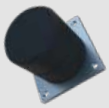 ZELLPUFFER		
Vehicle Suspension Pivot Arms, Trunnion Mounts, Gearbox Mountings	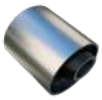 METAXENTRIC BUSH	 SPHERILASTIK	 UD/VP BUSH			
General Purpose Mounts Exhaust Systems, Small Fans, Instrument Panels	 BARREL BEARING	 METACONE	 M MOUNT			

Product images are graphical representations. Actual items may differ in appearance

Mount Finder Pro

ANTIVIBRATION MOUNT SELECTION MADE EASY

Find your perfect anti-vibration mount with the new MountFinder Pro mobile application.

MountFinder Pro directly measures your machines RPM to help determine the very best anti-vibration solution for your application.

Scan QR code to download now!

Product images are graphical representations. Actual items may differ in appearance

INDUSTRIAL ENVIRONMENTS

Factories and operating machinery run round-the-clock to demanding schedules and in noisy environments. Manufacturers are driven by the need to achieve maximum productivity from their equipment, and maximum comfort for their employees. By minimizing the damage caused by vibration and noise, we help our industrial customers achieve both, reliably and cost-effectively.

Calling on quality products which range from buffers and bushes to a wide range of mounts, we're experts in providing 'fit and forget' solutions on everything from machine tools to processing plant. We also work with OEMs to develop custom solutions, and back up our service with a robust and reliable global supply chain to optimize production, productivity and costs.

DISPOSAL CONSIDERATIONS OF RUBBER-METAL COMPONENTS

a) Releasing the metal parts for reuse:
In this process, the rubber track will be separated from the metal parts. For this purpose, what is known as a thermal release is usually used. The rubber-metal bond is destroyed at temperatures of 300 - 400 ° C. This treatment causes the rubber to char and the metal to rust on the surface. In general, the strength of the metal parts also decreases. We, therefore, recommend checking the metals with regard to mechanical properties and possible structural changes before reuse. There are specialized companies on the market for this process. If you are interested, Trelleborg AVS can give appropriate recommendations. In addition, the economic viability of metal reuse must be checked. As a rule, this method is recommended if the rubber-metal components contain expensive metal parts.

b) Complete disposal of rubber-metal components:
Alternatively and often more economical is the scrapping of rubber-metal parts. The components are either melted separately (in the dismantled state) or together with the machine/device in which they are mounted. The rubber and any hazardous substances it contains are completely destroyed. This also applies to organic hydraulic fluids, e.g. in hydraulic beeches, which therefore do not have to be drained off beforehand. Silicone fluids, e.g. in hydraulic bearings, burn to silicon dioxide in this process and also do not have to be removed beforehand. In general, it is not necessary to remove rubber-metal parts from the scrap package before melting them down. Please find out from your disposal company how many foreign metals, e.g. aluminum in scrap steel, are permitted. It can sometimes be economical to dismantle rubber-metal parts if, for example, better prices can be obtained for aluminum scrap than for steel scrap.

Working in industry on the frontline of innovation

INDUSTRIAL APPLICATIONS

We provide performance you can rely on to fit and forget. Our antivibration solutions give you a firm foundation to build sustainable productivity plans upon, across all manufacturing and processing equipment installations. Our strong supply chain means we can reduce costs and deliver on time and on budget.

Our intelligent innovation is focused on the outcomes you want to achieve: providing a safe environment for machine operators, reducing noise pollution, reducing downtime to save costs and increase revenue. We partner with you to provide so much more than products.

ANB

Buffer type ANB consists of a cylindrical rubber body bonded to a square baseplate of steel. Each corner of the baseplate has a fixing hole.

Special high-hysteresis rubber compound is used to ensure as much energy absorption as possible. The volume of the rubber is used at optimum efficiency. For new machine developments simpler designs and lighter calculated forces can be considered enabling a lower cost.

Through the damping of the rubber a high degree of energy absorption is achieved. The rubber is stiffer under dynamic conditions compared to static or pseudo static loading; hence more energy is absorbed for a given deformation.

The shock buffer type ANB is used to effectively limit movement of equipment or machine components.

These buffers are made from an oil and chemical resistant Nitrile rubber.

Typical applications:

- Lifting cranes
- Forestry vehicles
- Material handling equipment

Technical Drawing

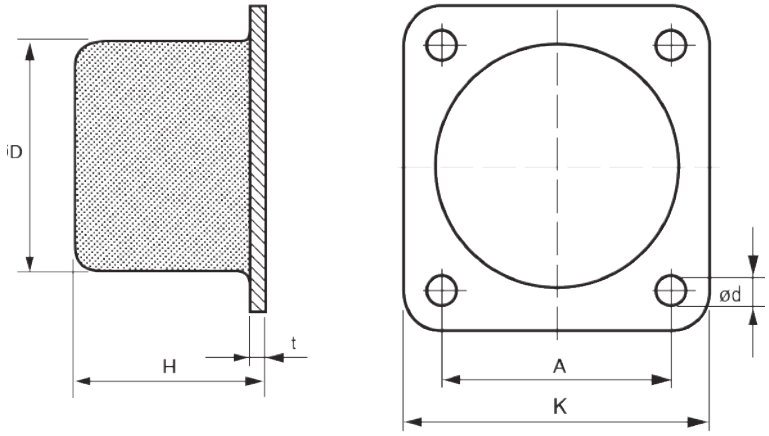

Product Data

REFERENCE	DRAWING NO.	PART NO.	DIMENSIONS (mm)						MAX. LOAD (kN)
			K	A	ØD	Ød	H	t	
ANB50	15-4034	10-00151	70	50	50	7	43	3	8,15
ANB75	15-4035	10-00152	100	75	75	9	63	3	20,4
ANB100	15-4037	10-00153	130	100	100	11	84	4	41,8
ANB150	15-4032	10-00010	185	150	150	13,5	126	6	91,75
ANB200	15-4033	10-00011	240	200	200	13,5	168	8	183,5

BA and Double U-Shear

BA and Double U-Shear are equally suitable for isolating vibrations from low speed machines and equipment, protecting sensitive and light weight units from external shocks and vibrations.

The mountings utilize bonded rubber in shear to permit relatively high deflections, providing excellent isolation of low frequencies. (Type BA 20/2 is a half section suitable for very light loads).

On rotating equipment applications the soft axis should be at right angles to the shaft. On mobile applications the stiff axis should be aligned in the direction of travel. For transit case applications the mountings need to be arranged so that the horizontal stiffness is the same in all directions.

Typical applications:

- Light fans and compressors
- Portable gensets and pumps
- Computers and electronic units
- Measuring and test equipment

Technical Drawing

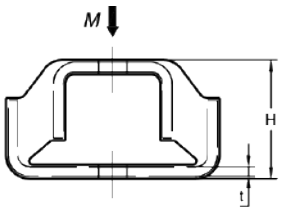

DOUBLE U-SHEAR
HOLE FIXING

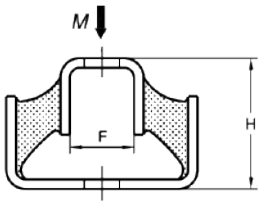

DOUBLE U-SHEAR
HOLE FIXING

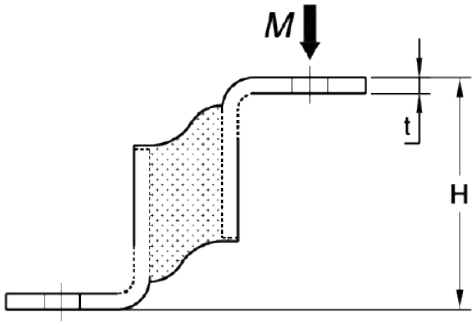

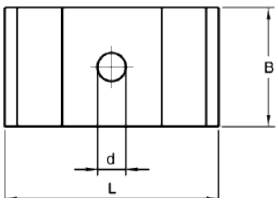

DOUBLE U-SHEAR
HOLE FIXING

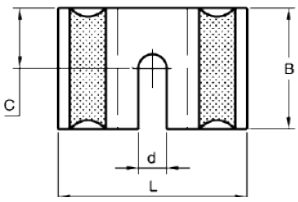

DOUBLE U-SHEAR
SLOTTED

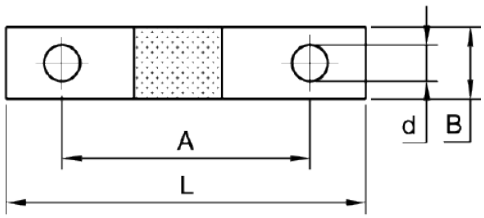

BA

Product Data

DRAWING NO.	PART NO.	HARDNESS (IRHD)	DIMENSIONS (mm)								MAX. LOAD (N)	MAX. DEFLECTION (mm)
			B	L	H	A	F	C	d	t		
BA												
17-4345	10-00005	40	20	90	58	62	-	-	8	4	120	7,3
	10-00006	60									270	5,8
DOUBLE U-SHEAR HOLE FIXING												
17-4035	10-00145	40	20	90	50	-	-	-	10	4	200	6
	10-00146	60									350	5,2
17-4036	10-00147	40	50	90	50	-	-	-	12	4	600	6,5
	10-00148	60									1100	5,5
DOUBLE U-SHEAR SLOTTED												
053 18 004	96764	50	20	61	43	-	20,4	10	6,6	3	120	6,1
	96763										150	5,6
	96765	65									160	4,3
053 18 003	96769	50	25	71	62	-	26,4	12,5	11	4	220	7
	96771	65									300	5,2
	96770	75										3,3
17-1482	10-00515	40	51	60	41	-	20	25	11	3	370	8,5
	10-00516	50									560	7,8
053 18 002	96775	50	50	81,5	78	-	32,4	25	13,5	4,5	850	7
	96777	65										4,2
	96773	75									980	3
053 18 001	96781	50	65	87	108	-	38,4	32,5	17,5	5	2000	7
	96784	65										3,5
	96779	75										2,8

Barrel Bearing Tonnenlager

Barrel Bearing Tonnenlager are ideal for their vertical loading and insulation against low-amplitude vibrations.

Masses that experience or themselves cause minor vibration amplitudes according to deflection can be mounted on spherical roller bearings. This makes this mount configuration suitable for selected engines, compressors, units, mounting equipment and also heavy duty switch cabinets, control systems, stationary control panels, measurement equipment.

Typical applications:

- Engine
- Compressors
- Heavy duty switch cabinets
- Control systems
- Stationary control panels
- Measuring equipment

Technical Drawing

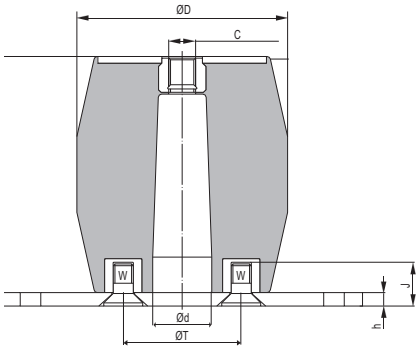

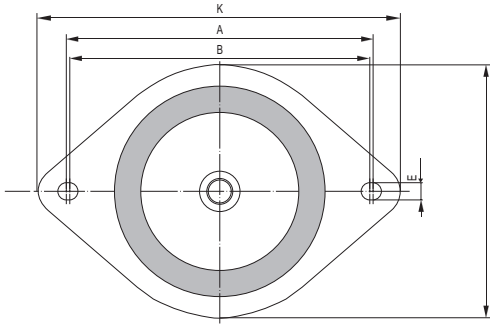

Product Data

DRAWING NO.	PART NO.	HARDNESS (IRHD)	DIMENSIONS (mm)										AXIAL		BOLT SIZE	MAX. BOLT TORQUE (Nm)
			ØD	Ød	H	ØT	J	C	W	L	ØD1	E	STIFFNESS (N/mm)	MAX. LOAD (kN)		
WITHOUT BASE PLATE																
039 18 756/101	49040061	50	125	35	142	70	18	M16	M12	-	-	-	180	9	M16	94,5
	49002648	60											280	14		
	49040132	70											400	20		

DRAWING NO.	PART NO.	HARDNESS (IRHD)	DIMENSIONS (mm)												AXIAL		BOLT SIZE	MAX. BOLT TORQUE (Nm)
			$ØD_1$	ØD	K	A	B	H	C	Ød	ØT	W	J	E	STIFFNESS (N/mm)	MAX. LOAD (kN)		
WITH BASE PLATE																		
039 18 756/111	49040133	50	150	125	214	182	178	150	M16	35	70	M12	26	10,2	180	9	M16	94,5
	49040134	60													280	14		
	49040135	70													400	20		

Bobbin Type A

Bobbin mounts can be used in a wide variety of applications to permit relative movement of the suspended mass and isolation from the effects of noise, vibration and shock. The bobbin mounts are designed to have a higher compressive stiffness and a lower shear stiffness.

Typical applications:

- Light fans
- Engines and pumps
- Compressors
- Measuring and test equipment

Technical Drawing

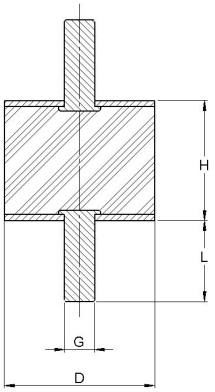

TYPE A STANDARD & CONTOURED

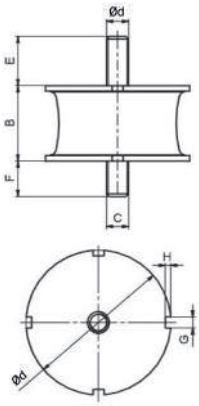

TYPE A NOTCHED

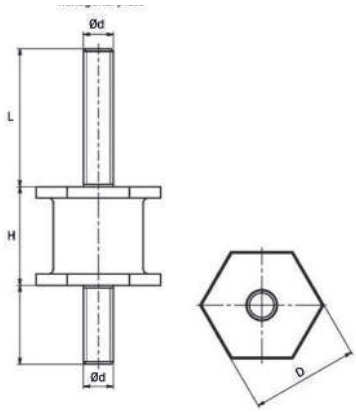

TYPE A HEXAGONAL PLATE

Product Data

Figures stated are for natural rubber (NR). Other compound types and hardness are available upon request. The technical values are to be used for info only.
Other dimensions on special demand with minimum quantity and/or order value.

REFERENCE*	DRAWING NO.	PART NO.	HARDNESS (IRHD)	DIMENSIONS (mm)				COMPRESSION		SHEAR		MAX. BOLT TORQUE (Nm)
				ØD	H	Ød	L	MAX. LOAD (N)	MAX. DEFLECTION (mm)	MAX. LOAD (N)	MAX. DEFLECTION (mm)	
TYPE A STANDARD												
A10/10	19-0272	20-01435	60	10	10	M4	10	41	0,9	20	2	1,6
A10/15	19-0400	20-01066	60	10,0	15	M4	10,0	41	1,2	15	3,1	1,6
A13/10	A 1310	509003	60	13	10	M5	10	48	0,8	26	1,6	2,7
A13/15	A 1315	509007	60	13	15	M5	10	40	1,0	26	2,6	2,7
A13/20	A 1320	509015	60	13	20	M5	10	40	1,0	26	2,6	2,7
A15/8	A 1508	509018	60	15	8	M4	12	95	0,4	34	1,0	1,3
A15/10	A 1510	509019	60	15	10	M4	12	75	0,6	34	1,4	1,3
A15/15	19-0769	20-01068	60	15	15	M4	10	102	1,5	41	3,2	1,6
A15/15	A 1515	509020	60	15	15	M4	12	58	1,0	34	2,4	1,3
A15/20	A 1520	509022	60	15	20	M4	12	52	1,4	34	3,3	1,3
A15/30	A 1530	509048	60	15	30	M4	12	48	2,1	34	5,3	1,3
A16/10	A 1610	509049	60	16	10	M5	12	89	0,6	39	1,4	2,7
A16/15	A 1615	509050	60	16	15	M5	12	67	1,0	39	2,4	2,7
A16/20	A 1620	509051	60	16	20	M5	12	60	1,4	39	3,3	2,7

*REFERENCE is defined as ØD/H

REFERENCE*	DRAWING NO.	PART NO.	HARDNESS (IRHD)	DIMENSIONS (mm)				COMPRESSION		SHEAR		MAX. BOLT TORQUE (Nm)
				ØD	H	Ød	L	MAX. LOAD (N)	MAX. DEFLECTION (mm)	MAX. LOAD (N)	MAX. DEFLECTION (mm)	
TYPE A STANDARD												
A16/25	A 1625	509052	60	16	25	M5	12	60	1,8	39	4,3	2,7
A20/8.5	A 208,5	509053	60	20	8,5	M6	17	220	0,4	61	1,0	4,7
A20/10	19-0296	20-00418	40	20	10	M6	15/18	173	0,5	71	1,4	8,3
A20/15	A 2015	509056	60	20	15	M6	17	121	0,9	61	2,1	4,7
A20/15	19-0383	20-01226	60	20	15	M6	18	163	1,2	71	2,6	8,3
A20/20	19-0384	20-00541	60	20	20	M6	15/18	163	1,7	71	4,5	8,3
A20/20	A 2020	509063	60	20	20	M6	17	103	1,3	61	3,1	4,7
A20/25	A 2025	509064	60	20	25	M6	17	95	1,7	61	4,1	4,7
A20/25	19-0387	20-01228	60	20	25	M6	15/18	153	2,1	61	6,2	8,3
A20/30	A 2030	509065	60	20	30	M6	17	95	2,2	61	5,0	4,7
A25/10	19-0297	20-00557	60	25	10	M6	18	306	0,8	122	1,5	8,3
A25/10	A 2510	509067	60	25	10	M8	20	184	0,3	61	0,8	11
A25/15	19-0415	20-00558	60	25	15	M6	18	296	1,5	112	2,5	8,3
A25/15	A 2515	509069	60	25	15	M6	18	216	0,9	95	2,2	4,7
		509070				M8	20					11
A25/20	A 2520	509071	60	25	20	M6	18	176	1,3	95	3,1	4,7
A25/20	19-0416	20-00559	60	25	20	M6	18	286	2,6	112	3,8	8,3
A25/22	A 2522	509072	60	25	22	M8	20	176	1,5	95	3,6	11
A25/25	19-0419	20-01437	60	25	25	M6	18	265	2,7	107	5,4	8,3
A25/25	A 2525	509073	60	25	25	M6	18	158	1,7	95	4,1	4,7
		509074				M8	20					11
A25/30	19-0421	20-01629	60	25	30	M6	18	255	3,4	92	6,7	8,3
A25/30	A 2530	509075	60	25	30	M8	20	148	2,1	95	5,2	11
A25/40	A 2540	509077	60	25	40	M8	20	137	2,9	95	7,2	11
A30/15	19-0267	20-01536	60	30	15	M8	20	510	0,9	173	2,6	20
A30/15	A 3015	509119	60	30	15	M8	25	353	0,9	137	2,2	11
A30/20	19-0388	20-01438	60	30	20	M8	20	449	1,7	173	3,9	20
A30/20	A 3020	509120	60	30	20	M8	25	277	1,3	137	3,1	11
A30/22	A 3022	509121	60	30	22	M8	25	277	1,5	137	3,5	11
A30/25	19-0389	20-01440	60	30	25	M8	20	408	2,1	163	5,3	20
A30/30	19-0392	20-01441	60	30	30	M8	20	387	2,9	153	6,6	20
A30/30	A 3030	509122	60	30	30	M8	25	225	2,1	137	5,2	11
A30/40	19-0393	20-00438	60	30	40	M8	20	306	4	102	10	20
A30/40	A 3040	509123	60	30	40	M8	25	206	2,8	137	7,1	11
A40/20	19-0268	20-01423	60	40	20	M8	23	918	1,5	306	3,8	20
A40/20	A 4020	509124	60	40	20	M10	25	588	1,3	243	3,1	23
A40/28	A 4028	509125	60	40	28	M10	25	464	1,9	243	4,7	23
A40/30	19-0395	20-01443	60	40	30	M8	23	714	2,4	306	6,6	20
A40/30	A 4030	509126	60	40	30	M8	23	464	2,2	243	5,1	11
A40/35	A 4035	509127	60	40	35	M10	25	417	2,4	243	6,1	23
A40/40	19-0397	20-00563	60	40	40	M8	23	663	3,5	265	9	20
A40/40	A 4040	509128	60	40	40	M8	23	417	2,9	243	7,0	11
		509129				M10	25					23
A40/45	A 4045	509130	60	40	45	M10	25	381	3,3	243	7,9	23
A50/20	A 5020	509131	60	50	20	M10	25	1153	1,2	380	2,9	23
A50/20	19-0270	20-01444	60	50	20	M10	28	2039	2,1	510	3,6	40
A50/25	A 5025	509132	60	50	25	M10	25	919	1,6	380	3,9	23

*REFERENCE is defined as ØD/H

Product images are graphical representations. Actual items may differ in appearance

REFERENCE*	DRAWING NO.	PART NO.	HARDNESS (IRHD)	DIMENSIONS (mm)				COMPRESSION		SHEAR		MAX. BOLT TORQUE (Nm)
				ØD	H	Ød	L	MAX. LOAD (N)	MAX. DEFLECTION (mm)	MAX. LOAD (N)	MAX. DEFLECTION (mm)	
TYPE A STANDARD												
A50/25	19-0401	20-00564	60	50	25	M10	28	1428	2,5	510	4,6	40
A50/30	A 5030	509133	60	50	30	M10	25	798	2,0	380	4,9	23
A50/30	19-0402	20-01445	60	50	30	M10	28	1428	3,2	510	6,4	40
A50/35	A 5035	509134	60	50	35	M10	25	725	2,4	380	5,9	23
A50/40	A 5040	509135	60	50	40	M10	25	677	2,7	380	6,9	23
A50/40	19-0404	20-01446	60	50	40	M10	28	1122	3,8	459	8,5	40
A50/45	A 5045	509136	60	50	45	M10	25	677	3,3	380	7,8	23
A50/45	19-0405	20-00882	60	50	45	M10	28	1071	4,1	459	10,1	40
A50/50	A 5050	509137	60	50	50	M10	25	618	3,5	380	8,9	23
A50/50	19-0407	20-00549	60	50	50	M10	28	1071	4,8	428	11,7	40
A60/25	A 6025	509138	60	60	25	M10	25	1519	1,6	547	3,9	23
A60/36	A 6036	509139	60	60	36	M10	25	1129	2,5	547	6,1	23
A60/45	A 6045	509140	60	60	45	M10	25	996	3,1	547	7,9	23
A70/35	A 7035	509141	60	70	35	M10	25	1759	2,3	745	5,7	23
A70/45	19-0512	20-01253	60	70	45	M10	28	2345	4,2	918	9,9	40
A75/40	19-0306	20-00547	60	75	40	M12	37	2957	3,6	1020	4,9	70
A70/50	A 7050	509142	60	70	50	M10	25	1391	3,4	745	8,6	23
A70/70	A 7070	509144	60	70	70	M10	25	1205	5,0	745	12,6	23
A75/25	A 7525	509145	60	75	25	M12	35	3039	1,5	855	3,7	39
A75/40	A 7540	509146	60	75	40	M12	35	1905	2,6	855	6,7	39
A75/50	A 7550	509147	60	75	50	M12	35	1591	3,3	855	8,6	39
A75/55	A 7555	509148	60	75	55	M12	35	1591	3,9	855	9,6	39
A80/30	A 8030	509149	60	80	30	M14	35	2952	1,9	973	4,7	62
A80/40	A 8040	509150	60	80	40	M14	35	2259	2,6	973	6,7	62
A80/70	A 8070	509151	60	80	70	M14	35	1647	5,0	973	1,3	62
A80/80	A 8080	509153	60	80	80	M14	35	1647	6,1	973	14,5	62
A100/40	19-0273	20-01259	60	100	40	M16	41	6730	3,9	2039	8,2	170
A100/40	A 10040	509154	60	100	40	M16	47	4153	2,6	1521	6,7	94,5
A100/55	19-0412	20-00568	60	100	55	M16	41	5200	6,1	2039	12,4	170
A100/55	A 10055	509155	60	100	55	M16	47	3231	3,8	1521	9,6	94,5
A100/80	A 10080	509156	60	100	80	M16	47	2469	5,4	1521	14,5	94,5
TYPE A CONTOURED												
A10/9	052 18 242	91015	45	10	9	M4	6	40	1,1	20	3,0	1,3
		90505	65					66		41		
A15/8	052 18 129	90872	50	15	8	M4	6	100	0,9	44	2,4	1,3
		91007	65					193		85		
A15/15	052 18 058	91019	50	15	15	M4	15	70	2,0	35	6,5	1,3
		91008	65					160		80		
A16/6	052 18 057	91014	50	16	6	M4	10	189	0,5	50	1,4	1,3
		91695	65					365		97		
A20/15	052 18 039	91397	50	20	15	M6	15	170	1,9	67	6,0	4,7
		90589	65					387		174		
A20/20	052 18 149	97176	50	20	20	M6	10	151	2,6	61	8,0	4,7
		97175	65					287		128		
A20/20	052 18 061	97165	50	20	20	M6	18,5	151	2,6	61	8,0	4,7
		97164	65					287		128		
A20/25	052 18 095	91393	50	20	25	M6	18,5	70	2,6	65	9,0	4,7

*REFERENCE is defined as ØD/H

REFERENCE*	DRAWING NO.	PART NO.	HARDNESS (IRHD)	DIMENSIONS (mm)				COMPRESSION		SHEAR		MAX. BOLT TORQUE (Nm)
				ØD	H	Ød	L	MAX. LOAD (N)	MAX. DEFLECTION (mm)	MAX. LOAD (N)	MAX. DEFLECTION (mm)	
TYPE A CONTOURED												
A20/25	052 18 095	91064	65	20	25	M6	18,5	214	2,6	126	9,0	4,7
A25/20	052 18 132	90678	50	25	20	M6	10	125	2,1	111	8,0	4,7
		470951	60 (AEM)					240	1,8	220	10,8	
		90679	65					392	2,1	221	8,0	
A25/20	052 18 086	91055	50	25	20	M6	15	119	2,0	97	7,0	4,7
		90646	65					232		189		
A25/30	052 18 050	54001266	50	25	30	M6	18,5	96	2,5	75	8,2	4,7
A25/35	052 18 125	92267	50	25	35	M6	18,5	107	4,0	96	13,0	4,7
		90936	65					333		142		
A30/15	052 18 151	92149	50	30	15	M8	23	450	1,6	185	5,2	11
		90985	65					986		394		
		480188	75					1841		665		
A30/20	052 18 099	97208	50	30	20	M8	12	305	2,1	124	6,0	11
		97209	65					662		282		
A30/20	052 18 051	97202	50	30	20	M8	23	214	2,0	167	7,5	11
		97201	65					717		390		
A30/25	052 18 163	91608	50	30	25	M8	23	355	3,1	143	8,4	11
		91149	65					570		341		
A30/30	052 18 067	91386	50	30	30	M8	23	225	2,8	118	11,0	11
		91061	65					488		279		
A40/30	052 18 123	90999	50	40	30	M8	22,5	685	3,9	292	11,0	11
		91091	65					917		571		
		90973	85					2207		1375		
A40/30	052 18 018	90574	65	40	30	M10	17,5	1138	3,6	527	11,5	23
A40/30	052 18 070	91234	50	40	30	M10	27,5	579	3,6	293	11,5	23
		90634	65					1138		527		
		91116	75					2298		1208		
A40/40	052 18 153	90918	50	40	40	M8	22,5	402	5,3	268	14,0	11
		90691	65					779		519		
A40/40	052 18 168	93006	50	40	40	M8	27,5	402	5,3	268	14,0	11
		90744	65					779		519		
A40/40	052 18 116	90668	65	40	40	M10	27,5	779	5,3	519	14,0	23
A50/20	052 18 232	90734	65	50	20	M10	27,5	1844	1,2	545	3,0	23
A50/30	052 18 089	90108	50	50	30	M10	17,5	745	3,4	433	10,0	23
		90649	65					2475		995		
A50/30	052 18 040	92162	50	50	30	M10	27,5	1140	3,9	496	12,0	23
		91279	65					2555		1103		
		90451	75					4093		1692		
A50/40	052 18 104	91145	65	50	40	M10	17,5	1366	4,0	813	15,0	23
A50/40	052 18 072	90915	50	50	40	M10	27,5	914	4,5	476	16,0	23
		90636	65					1584		819		
A50/45	052 18 174	90747	50	50	45	M10	27,5	705	5,0	443	17,0	23
		90924	65					1628		829		
		461948	75					2358		1139		
A50/50	052 18 110	92076	50	50	50	M10	27,5	647	6,8	433	18,0	23
		90662	65					1252		837		
A60/45	052 18 273	91784	65	60	45	M10	19,5	2055	6,0	1231	16,0	23

*REFERENCE is defined as ØD/H

Product images are graphical representations. Actual items may differ in appearance

REFERENCE*	DRAWING NO.	PART NO.	HARDNESS (IRHD)	DIMENSIONS (mm)				COMPRESSION		SHEAR		MAX. BOLT TORQUE (Nm)
				ØD	H	Ød	L	MAX. LOAD (N)	MAX. DEFLECTION (mm)	MAX. LOAD (N)	MAX. DEFLECTION (mm)	
TYPE A CONTOURED												
A70/45	052 18 206	90396	50	70	45	M10	27,5	1400	4,7	900	17,0	23
		90771	65					2400		1800		
A70/60	052 18 075	90322	50	70	60	M12	37	413	5,5	232	17,0	39
		91036	65					2188		984		
A75/25	052 18 078	91185	50	75	25	M12	37	3981	2,5	1332	9,6	39
		91257	65					9158		2987		
		49014357	75					11150		5021		
A75/40	052 18 272	97237	50	75	40	M12	25	1921	5,1	960	13,6	39
A75/40	052 18 196	97223	50	75	40	M12	37	1921	5,1	960	13,6	39
		97224	65					4452		2135		
A75/50	052 18 052	91065	65	75	50	M12	37	4790	6,5	2146	20,0	39
A75/55	052 18 210	90452	50	75	55	M12	37	1445	5,0	630	13,0	39
		91077	65					3345		1432		
A75/70	052 18 113	91683	50	75	70	M12	37	1949	9,6	810	25,6	39
		90665	65					4308		1744		
		92303	85					6797		4480		
A100/40	052 18 131	97185	50	100	40	M16	36	6323	4,8	1889	12,8	94,5
A100/40	052 18 016	97184	50	100	40	M16	46	6323	4,8	1889	12,8	94,5
		97183	65					11965		3425		
A100/55	052 18 100	92137	50	100	55	M16	46	3479	7,0	1880	20,0	94,5
		90657	65					9152		3812		
		92090	75					16700		7538		
A100/75	052 18 083	90644	50	100	75	M16	46	2344	8,0	1318	20,0	94,5
		91135	65					6630		2670		
A100/75	052 18 159	90694	65	160	75	M16	46	20485	10,0	9930	26,8	94,5
A160/114	052 18 178	92001	75	160	114	M16	44	119000	10,0	9570	30,0	94,5

*REFERENCE is defined as ØD/H

REFERENCE*	DRAWING NO.	PART NO.	HARDNESS (IRHD)	DIMENSIONS (mm)					COMPRESSION		SHEAR		MAX. BOLT TORQUE (Nm)
				ØD	H	Ød	L	I	MAX. LOAD (N)	MAX. DEFLECTION (mm)	MAX. LOAD (N)	MAX. DEFLECTION (mm)	
TYPE A HEXAGONAL PLATE													
A21/15	052 18 898	49004238	45	21	15	M6	16	16	166	1,5	71	4,4	4,7
A21/20	052 18 895	49002825	45	21	20	M6	16	16	144	2,4	59	6,4	4,7
		49011379	60						330		96		
		49016672	45						145		60	6,3	11
A21/20	052 18 906	49038588	60	21	20	M6	28	16	245	2,4	100	6,4	11
A26/34	052 18 921	49039149	45	26	34	M8	19	19	138	2,8	63	10,5	4,7

Note: CR compound type is used for the listed parts. Other compounds available on request.

REFERENCE*	DRAWING NO.	PART NO.	DIMENSIONS (mm)							COMPRESSION		SHEAR		MAX. BOLT TORQUE (Nm)
			ØD	H	Ød	L	I	G	h	MAX. LOAD (N)	MAX. DEFLECTION (mm)	MAX. LOAD (N)	MAX. DEFLECTION (mm)	
TYPE A NOTCHED PLATE														
A105/55	052 18 389	49037737	105	55	M16	26	36	8	4	3000	6,0	1600	20,0	200
		49037738								4100		2200		
		49037739								5600		3000		
		49037740								7500		4000		

*REFERENCE is defined as ØD/H

Bobbin Type B

Bobbin mounts can be used in a wide variety of applications to permit relative movement of the suspended mass and isolation from the effects of noise, vibration and shock. The bobbin mounts are designed to have a higher compressive stiffness and a lower shear stiffness.

Typical applications:

- Light fans
- Engines and pumps
- Compressors
- Measuring and test equipment

Technical Drawing

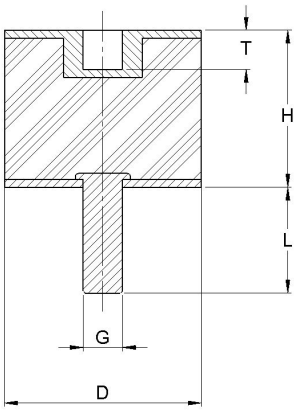

TYPE B STANDARD
& CONTOURED

Product Data

Figures stated are for natural rubber (NR). Other compound types and hardness are available upon request. The technical values are to be used for info only.
Other dimensions on special demand with minimum quantity and/or order value.

REFERENCE*	DRAWING NO.	PART NO.	HARDNESS (IRHD)	DIMENSIONS (mm)					COMPRESSION		SHEAR		MAX. BOLT TORQUE (Nm)
				ØD	H	Ød	L	T	MAX. LOAD (N)	MAX. DEFLECTION (mm)	MAX. LOAD (N)	MAX. DEFLECTION (mm)	
TYPE B STANDARD													
B10/10	19-0307	20-01449	60	10	10	M4	10	4	57	0,9	10	2,3	1,6
B10/15	B1015	54001136	50	10	15	M4	10	4	15	1,2	12	3,4	1,3
B10/15	B1015	54001137	65	10	15	M4	10	4	29	1,2	22	3,6	1,3
B15/15	19-0529	20-01698	60	15	15	M4	10	5	117	1,4	51	3,8	1,6
B15/15	B 1515	509078	60	15	15	M4	12	3	68	0,5	31	1,3	1,3
B16/10	B 1610	509079	60	16	10	M5	12	3	80	0,5	31	5,1	2,7
B16/15	B 1615	509080	60	16	15	M5	12	3	61	0,9	35	1,3	2,7
B16/20	B 1620	509081	60	16	20	M5	12	3	54	1,2	35	2,1	2,7
B16/25	B 1625	509082	60	16	25	M5	12	3	51	1,6	35	3,8	2,7
B20/15	B 2015	509083	60	20	15	M6	17	4	109	0,8	55	1,9	4,7
B20/15	19-0310	20-01264	60	20	15	M6	18	6	163	0,9	107	3,8	8,3
B20/20	B 2020	509085	60	20	20	M6	17	4	93	1,2	55	2,8	4,7
B20/20	19-0524	20-01265	60	20	20	M6	18	6	163	1,2	92	5	8,3
B20/25	B 2025	509086	60	20	25	M6	17	4	85	1,5	55	3,9	4,7

*REFERENCE is defined as ØD/H

REFERENCE*	DRAWING NO.	PART NO.	HARDNESS (IRHD)	DIMENSIONS (mm)					COMPRESSION		SHEAR		MAX. BOLT TORQUE (Nm)
				ØD	H	Ød	L	T	MAX. LOAD (N)	MAX. DEFLECTION (mm)	MAX. LOAD (N)	MAX. DEFLECTION (mm)	
TYPE B STANDARD													
B20/25	19-0526	20-01266	60	20	25	M6	18	6	153	2,5	92	6,3	8,3
B20/30	B 2030	509087	60	20	30	M6	18	5	81	1,8	55	4,5	4,7
B25/15	19-0311	20-01267	60	25	15	M6	18	6	296	1,3	163	3,8	8,3
B25/20	B 2520	509091	60	25	20	M8	20	5	158	1,2	86	2,0	11
B25/20	19-0539	20-01268	60	25	20	M6	18	6	286	2,1	148	5	8,3
B25/22	B 2522	509094	60	25	22	M8	20	6	151	1,3	86	2,8	11
B25/25	B 2525	509095	60	25	25	M8	20	6	142	1,5	86	3,7	11
B25/25	19-0540	20-00573	60	25	25	M6	18	6	265	2,9	138	6,3	8,3
B25/30	B 2530	509096	60	25	30	M8	20	6	133	1,9	86	3,7	11
B25/30	19-0541	20-01016	60	25	30	M6	18	6	255	3,2	138	7,5	8,3
B25/40	B 2540	509097	60	25	40	M8	20	6	124	2,5	86	4,7	11
B30/15	B 3015	509098	60	30	15	M8	25	6	317	0,8	86	6,5	11
B30/15	19-0542	20-01269	60	30	15	M8	20	8	689	1,4	212	3,4	20
B30/20	B 3020	509099	60	30	20	M8	25	6	250	1,2	123	1,9	11
B30/20	19-0543	20-00898	60	30	20	M8	20	8	387	1,6	214	5	20
B30/22	B 3022	509100	60	30	22	M8	25	6	235	1,3	123	2,9	11
B30/25	19-0546	20-00464	60	30	25	M8	20	8	377	2,3	204	6,3	20
B30/30	B 3030	509101	60	30	30	M8	25	6	203	1,9	123	3,2	11
B30/30	19-0547	20-00575	60	30	30	M8	20	8	362	2,8	194	7,5	20
B30/40	B 3040	509102	60	30	40	M8	25	6	185	2,6	123	4,6	11
B40/20	B 4020	509103	60	40	20	M10	25	8	530	1,2	219	4,2	23
B40/28	B 4028	509104	60	40	28	M10	25	8	418	1,7	219	4,6	23
B40/30	B 4030	509105	60	40	30	M10	25	8	403	1,9	219	5,5	23
B40/30	19-0554	20-00466	60	40	30	M8	20	8	612	2,4	347	7,5	20
B40/35	B 4035	509106	60	40	35	M10	25	8	375	2,2	219	6,3	23
B40/40	B 4040	509107	60	40	40	M10	25	8	356	2,5	219	2,8	23
B40/40	19-0555	20-00821	60	40	40	M8	23	8	612	3,8	336	10	20
B40/45	B 4045	509108	60	40	45	M10	25	8	342	2,9	219	6,3	23
B50/20	B 5020	509109	60	50	20	M10	25	8	1038	1,1	219	7,2	23
B50/20	19-0556	20-01273	60	50	20	M10	28	10	1326	1	464	4	40
B50/30	B 5030	509110	60	50	30	M10	25	8	718	1,8	342	3,5	23
B50/30	19-0557	20-00577	60	50	30	M10	28	10	1224	2,6	510	7	40
B50/35	B 5035	509111	60	50	35	M10	25	8	653	2,2	342	4,4	23
B50/40	B 5040	509112	60	50	40	M10	25	8	610	2,5	342	5,3	23
B50/40	19-0558	20-00578	60	50	40	M10	28	10	1122	3,6	321	10	40
B50/45	B 5045	509113	60	50	45	M10	25	8	563	2,7	342	6,2	23
B50/50	B 5050	509114	60	50	50	M10	25	8	556	3,1	342	7,0	23
B50/50	19-0561	20-01276	60	50	50	M10	28	10	1071	5,1	515	12,5	40
B60/36	B 6036	509115	60	60	36	M10	25	8	1016	2,2	492	3,5	23
B60/45	B 6045	509116	60	60	45	M10	25	8	896	2,8	492	5,5	23
B70/35	B 7035	509117	60	70	35	M10	25	9	1583	2,1	429	7,0	23
B70/50	B 7050	509207	60	70	50	M10	25	9	1252	3,1	671	5,1	23
B70/70	B 7070	509208	60	70	70	M10	25	9	1252	3,1	671	7,7	23
B75/40	B 7540	509209	60	75	40	M12	35	8	1714	2,5	770	3,3	39
B75/45	B 7545	509210	60	75	45	M12	35	8	1581	2,7	770	6,9	39
B75/50	B 7550	509211	60	75	50	M12	35	8	1485	3,1	770	6,0	39
B75/50	19-0536	20-01283	60	75	50	M12	37	12	2651	4,3	1208	12,5	70

*REFERENCE is defined as ØD/H

REFERENCE*	DRAWING NO.	PART NO.	HARDNESS (IRHD)	DIMENSIONS (mm)					COMPRESSION		SHEAR		MAX. BOLT TORQUE (Nm)
				ØD	H	Ød	L	T	MAX. LOAD (N)	MAX. DEFLECTION (mm)	MAX. LOAD (N)	MAX. DEFLECTION (mm)	
TYPE B STANDARD													
B75/55	19-0537	20-00824	60	75	55	M12	37	12	2447	4,7	1193	13,8	70
B80/40	B 8040	509212	60	80	40	M14	35	12	2033	3,4	876	4,2	62
B80/70	B 8070	509213	60	80	70	M14	35	12	1620	5,3	973	13,1	62
B80/80	B 8080	509214	60	80	80	M14	35	12	1647	6,1	973	14,5	62
B100/40	B 10040	509215	60	100	40	M16	45	16	3575	2,6	1369	6,0	94,5
B100/40	19-0322	20-00581	60	100	40	M16	41	16	6628	3,2	2355	10	170
B100/55	B 10055	509216	60	100	55	M16	45	16	3231	3,8	1521	9,6	94,5
B100/55	19-0535	20-01285	60	100	55	M16	41	16	5200	5	2223	13,8	170
B100/60	19-0849	20-01286	60	100	60	M16	41	16	5098	5,6	2167	15	170
B100/80	B 10080	509217	60	100	80	M16	45	16	2649	5,8	1521	14,5	94,5
B100/100	B 100100	509218	60	100	100	M16	45	16	2440	7,4	1520	18,4	94,5
TYPE B CONTOURED													
B10/9	052 18 251	91158	45	10	9	M4	6	3,5	160	0,3	32	1,5	1,3
B10/9	052 18 251	90786	65	10	9	M4	6	3,5	566	0,3	95	1,5	1,3
B15/15	052 18 059	90614	50	15	15	M4	15	4	77	1,5	37	4,0	1,3
B15/15	052 18 059	90615	65	15	15	M4	15	4	147	1,5	66	4,0	1,3
B20/20	052 18 137	97170	50	20	20	M6	10,5	6,5	94	2,2	74	7,0	4,7
B20/20	052 18 137	97169	65	20	20	M6	10,5	6,5	207	2,2	165	7,0	4,7
B20/20	052 18 137	97171	75	20	20	M6	10,5	6,5	321	2,2	256	7,0	4,7
B20/20	052 18 137	97172	85	20	20	M6	10,5	6,5	500	2,2	397	7,0	4,7
B20/20	052 18 062	97166	50	20	20	M6	18,5	6,5	167	2,1	87	7,0	4,7
B20/20	052 18 062	97167	65	20	20	M6	18,5	6,5	324	2,1	171	7,0	4,7
B20/25	052 18 096	91865	50	20	25	M6	18,5	6,5	139	3,0	64	8,0	4,7
B20/25	052 18 096	91519	65	20	25	M6	18,5	6,5	347	3,0	156	8,0	4,7
B25/20	052 18 150	91514	50	25	20	M6	10,5	6,5	222	2,0	132	7,0	4,7
B25/20	052 18 087	91192	50	25	20	M6	15	6,5	222	2,0	132	7,0	4,7
B25/20	052 18 087	90647	65	25	20	M6	15	6,5	302	2,0	246	7,0	4,7
B25/30	052 18 063	91839	50	25	30	M6	18,5	6,5	208	3,7	100	12,1	4,7
B25/30	052 18 063	91163	65	25	30	M6	18,5	6,5	475	3,7	236	12,1	4,7
B25/35	052 18 126	91617	65	25	35	M6	18,5	6,5	323	4,8	239	12,8	4,7
B30/20	052 18 195	97210	65	30	20	M8	13	8	896	1,3	725	8,0	11
B30/20	052 18 195	97211	75	30	20	M8	13	8	1000	1,3	786	8,0	11
B30/20	052 18 195	97212	80	30	20	M8	13	8	1310	1,3	1030	8,0	11
B30/20	052 18 065	597205	50	30	20	M8	23	8	524	1,6	242	6,3	11
B30/20	052 18 065	97206	65	30	20	M8	23	8	913	1,6	498	6,3	11
B30/30	052 18 068	91441	50	30	30	M8	23	8	310	3,4	157	11,3	11
B30/30	052 18 068	90632	65	30	30	M8	23	8	703	3,4	381	11,3	11
B40/30	052 18 124	91000	50	40	30	M8	22,5	8	666	3,0	348	10,0	11
B40/30	052 18 124	90671	65	40	30	M8	22,5	8	1300	3,0	670	10,0	11
B40/30	052 18 124	92476	75	40	30	M8	22,5	8	1597	3,0	867	8,0	11
B40/30	052 18 071	91107	50	40	30	M10	27,5	10	666	3,0	348	10,0	23
B40/30	052 18 071	90635	65	40	30	M10	27,5	10	1300	3,0	670	10,0	23
B40/30	052 18 071	91654	75	40	30	M10	27,5	10	1597	3,0	867	8,0	23
B40/40	052 18 152	92089	50	40	40	M8	22,5	8	418	4,2	268	16,0	11
B40/40	052 18 152	91561	65	40	40	M8	22,5	8	1193	4,2	696	16,0	11
B45/50	052 18 187	91079	50	45	50	M8	22,5	8	571	6,7	394	18,0	11
B45/50	052 18 187	90758	65	45	50	M8	22,5	8	1261	6,7	871	18,0	11

*REFERENCE is defined as ØD/H

Product images are graphical representations. Actual items may differ in appearance

REFERENCE*	DRAWING NO.	PART NO.	HARDNESS (IRHD)	DIMENSIONS (mm)					COMPRESSION		SHEAR		MAX. BOLT TORQUE (Nm)
				ØD	H	Ød	L	T	MAX. LOAD (N)	MAX. DEFLECTION (mm)	MAX. LOAD (N)	MAX. DEFLECTION (mm)	
TYPE B CONTOURED													
B50/30	052 18 090	91468	50	50	30	M10	17,5	10	750	3,0	494	10,0	23
B50/30	052 18 090	91254	65	50	30	M10	17,5	10	1926	3,0	1002	10,0	23
B50/30	052 18 090	91321	75	50	30	M10	17,5	10	2577	3,0	1690	10,0	23
B50/30	052 18 046	90601	65	50	30	M10	27,5	10	1926	3,0	1002	10,0	23
B50/40	052 18 073	91312	65	50	40	M10	27,5	10	1860	4,6	1014	15,1	23
B50/50	052 18 111	92075	50	50	50	M10	27,5	10	738	6,8	494	18,0	23
B50/50	052 18 111	90844	65	50	50	M10	27,5	10	1489	6,8	1000	18,0	23
B60/45	052 18 274	92502	50	60	45	M10	19,5	10	1211	6,0	726	16,0	23
B60/45	052 18 274	91476	65	60	45	M10	19,5	10	2676	6,0	1600	16,0	23
B70/45	052 18 200	91607	50	70	45	M10	27,5	10	1400	4,7	900	17,0	23
B70/45	052 18 200	90768	65	70	45	M10	27,5	10	2400	4,7	1800	17,0	23
B70/60	052 18 076	92004	50	70	60	M12	37	10,5	1472	7,5	806	25,0	39
B70/60	052 18 076	90639	65	70	60	M12	37	10,5	2743	7,5	1439	25,0	39
B75/40	052 18 197	97227	50	75	40	M12	37	10,5	2624	5,1	1257	13,6	39
B75/40	052 18 197	97226	65	75	40	M12	37	10,5	5809	5,1	2775	13,6	39
B75/40	052 18 197	97228	75	75	40	M12	37	10,5	8968	5,1	4313	13,6	39
B75/50	052 18 081	91575	50	75	50	M12	37	10,5	2124	6,0	1147	20,0	39
B75/50	052 18 081	90642	65	75	50	M12	37	10,5	4169	6,0	2191	20,0	39
B75/55	052 18 211	92459	65	75	55	M12	37	12	5458	7,4	2417	24,5	39
B75/55	052 18 211	90899	75	75	55	M12	37	12	6233	7,4	3675	24,5	39
B75/70	052 18 114	92491	50	75	70	M12	37	12	1493	8,0	1000	25,0	39
B75/70	052 18 114	90666	65	75	70	M12	37	12	3819	8,0	1770	25,0	39
B100/40	052 18 156	597187	50	100	40	M16	36	15,8	2439	1,9	1000	6,4	94,5
B100/40	052 18 156	97186	65	100	40	M16	36	15,8	5800	1,9	2441	6,4	94,5
B100/40	052 18 156	92744	75	100	40	M16	36	15,8	11471	1,9	5233	6,4	94,5
B100/40	052 18 156	92046	80	100	40	M16	36	15,8	12329	1,9	5300	6,4	94,5
B100/40	052 18 015	97182	50	100	40	M16	46	15,8	2845	2,0	2112	11,5	94,5
B100/40	052 18 015	97181	65	100	40	M16	46	15,8	6291	2,0	4200	11,5	94,5
B100/40	052 18 015	92152	75	100	40	M16	46	15,8	10144	2,0	6702	11,5	94,5
B100/55	052 18 101	500635	40	100	55	M16	46	15,8	2500	5,3	1800	19,6	94,5
B100/55	052 18 101	49038638	50	100	55	M16	46	15,8	4463	7,0	1951	19,0	94,5
B100/55	052 18 101	90658	65	100	55	M16	46	15,8	10560	7,0	4429	19,0	94,5
B100/55	052 18 101	92087	75	100	55	M16	46	15,8	14444	7,0	6015	19,0	94,5
B100/55	052 18 101	91108	80	100	55	M16	46	15,8	19951	7,0	8358	19,0	94,5
B100/75	052 18 084	49041335	50	100	75	M16	46	15,8	2750	8,0	1274	20,0	94,5
B100/75	052 18 084	92274	65	100	75	M16	46	15,8	5904	8,0	3320	20,0	94,5
B160/75	052 18 158	92530	50	160	75	M16	46	15,8	5784	6,0	3500	20,0	94,5
B160/75	052 18 158	90693	65	160	75	M16	46	15,8	18850	6,0	9020	20,0	94,5
B160/75	052 18 158	92458	75	160	75	M16	46	15,8	27100	6,0	13110	20,0	94,5
B160/75	052 18 158	91795	80	160	75	M16	46	15,8	30840	6,0	18680	20,0	94,5

*REFERENCE is defined as ØD/H

Bobbin Type C

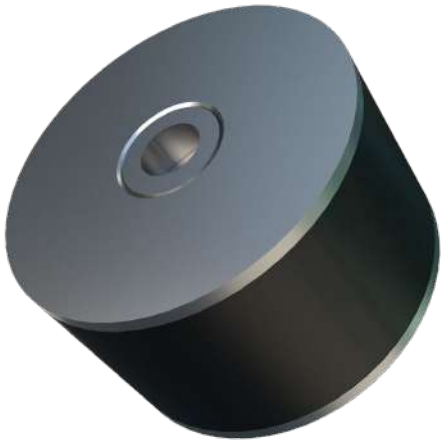

Bobbin mounts can be used in a wide variety of applications to permit relative movement of the suspended mass and isolation from the effects of noise, vibration and shock. The bobbin mounts are designed to have a higher compressive stiffness and a lower shear stiffness.

Typical applications:

- Light fans
- Engines and pumps
- Compressors
- Measuring and test equipment

Technical Drawing

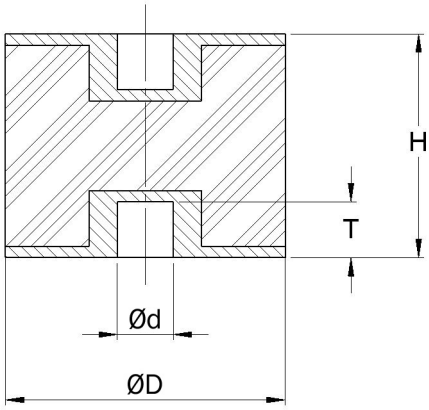

TYPE C STANDARD
& CONTOURED

Product Data

Figures stated are for natural rubber (NR). Other compound types and hardness are available upon request. The technical values are to be used for info only.
Other dimensions on special demand with minimum quantity and/or order value.

REFERENCE*	DRAWING NO.	PART NO.	HARDNESS (IHDR)	DIMENSIONS (mm)				COMPRESSION		SHEAR		MAX. BOLT TORQUE (Nm)
				ØD	H	Ød	T	MAX. LOAD (N)	MAX. DEFLECTION (mm)	MAX. LOAD (N)	MAX. DEFLECTION (mm)	
TYPE C STANDARD												
C10/10	19-0324	20-00095	60	10	10	M4	4	98	1,6	12	1,2	1,3
C10/15	C1015	54001138	50	10	15	M4	4	15	1,1	12	3,9	1,3
C10/15	C1015	54001139	65	10	15	M4	4	29	1,2	22	3,6	1,3
C15/15	19-0325	20-00583	60	15	15	M4	4	122	1,5	41	2	1,3
C15/20	C1520	54001169	50	15	20	M4	4	34	1,7	26	5,1	1,3
C15/20	C1520	54001170	65	15	20	M4	4	65	1,7	50	4,9	1,3
C16/15	C 1615	509219	60	16	15	M5	3	57	0,8	33	2,9	2,7
C16/20	C 1620	509220	60	16	20	M5	3	51	1,1	33	3,6	2,7
C16/25	C 1625	509221	60	16	25	M5	3	48	1,5	51	1,8	2,7
C20/15	C 2015	509222	60	20	15	M6	4	102	0,7	51	3,3	4,7
C20/20	C 2020	509223	60	20	20	M6	4	86	1,1	51	4,2	4,7
C20/20	19-0551	20-01289	60	20	20	M6	4/6	173	1,6	51	2,5	8,3
C20/25	C 2025	509224	60	20	25	M6	4	79	1,4	51	5,0	4,7
C20/25	19-0552	20-00584	60	20	25	M6	6	153	2,2	41	2,7	8,3

*REFERENCE is defined as ØD/H

REFERENCE*	DRAWING NO.	PART NO.	HARDNESS (IHDR)	DIMENSIONS (mm)				COMPRESSION		SHEAR		MAX. BOLT TORQUE (Nm)
				ØD	H	Ød	T	MAX. LOAD (N)	MAX. DEFLECTION (mm)	MAX. LOAD (N)	MAX. DEFLECTION (mm)	
TYPE C STANDARD												
C20/30	C 2030	509225	60	20	30	M6	5	76	1,7	51	6,3	4,7
C20/30	19-0553	20-00363	60	20	30	M6	6	120	2,5	40	3	8,3
C25/20	C 2520	509226	60	25	20	M8	6	148	1,1	80	3,0	11
C25/20	19-0327	20-01291	60	25	20	M6	6	286	1,7	92	3	8,3
C25/22	C 2522	509227	60	25	22	M8	6	141	1,2	80	3,4	11
C25/25	C 2525	509228	60	25	25	M8	6	133	1,4	80	4,4	11
C25/25	19-0424	20-01292	60	25	25	M6	6	265	2,2	82	3,5	8,3
C25/30	C 2530	509229	60	25	30	M8	6	124	1,7	80	6,0	11
C25/40	C 2540	509230	60	25	40	M8	6	115	2,4	115	1,8	11
C30/22	C 3022	509231	60	30	22	M8	6	219	1,2	115	4,3	11
C30/25	19-0328	20-00475	60	30	25	M8	8	377	2,2	122	3,6	20
C30/30	C 3030	509232	60	30	30	M8	6	189	1,7	115	5,9	11
C30/30	19-0427	20-01455	60	30	30	M8	10	362	2,6	112	4,1	20
C30/40	C 3040	509233	60	30	40	M8	6	173	2,4	204	2,6	11
C30/40	19-0812	20-00476	60	30	40	M8	8	437	3,6	212	10,9	20
C40/28	C 4028	509234	60	40	28	M10	8	390	1,6	204	5,9	23
C40/30	C 4030	509235	60	40	30	M10	8	380	1,7	204	5,9	23
C40/30	19-0329	20-00551	60	40	30	M8	8	714	2,7	255	5,2	20
C40/35	C 4035	509236	60	40	35	M10	8	350	2,0	204	6,7	23
C40/40	C 4040	509237	60	40	40	M10	8	330	2,4	204	4,4	23
C40/40	19-0423	20-00587	60	40	40	M8	8	663	3,9	255	7,4	20
C40/45	C 4045	509238	60	40	45	M10	8	320	2,7	320	2,5	23
C50/30	19-0330	20-01456	60	50	30	M10	10	1224	2,4	408	5,2	40
C50/30	C 5030	509239	60	50	30	M10	8	670	1,6	320	5,0	23
C50/35	C 5035	509240	60	50	35	M10	8	610	2,0	320	5,8	23
C50/40	C 5040	509241	60	50	40	M10	8	570	2,3	320	6,5	23
C50/40	19-0436	20-01457	60	50	40	M10	10	1122	3,3	408	7,4	40
C50/45	C 5045	509242	60	50	45	M10	8	540	2,6	320	7,3	23
C50/45	19-0438	20-01025	60	50	45	M10	10	1071	4,1	408	8,6	40
C50/50	C 5050	509243	60	50	50	M10	8	520	3,0	460	3,6	23
C50/50	19-0440	20-01313	60	50	50	M10	10	1071	4,9	408	9,7	40
C60/36	C 6036	509244	60	60	36	M10	8	950	2,0	460	6,5	23
C60/45	C 6045	509245	60	60	45	M10	8	840	2,6	630	4,8	23
C70/35	C 7035	509246	60	70	35	M10	9	1480	1,9	630	7,3	23
C70/50	C 7050	509247	60	70	50	M10	9	1170	2,9	630	10,7	23
C70/70	C 7070	509248	60	70	70	M10	9	1010	4,2	720	3,2	23
C75/40	C 7540	509249	60	75	40	M12	9	1600	2,2	720	7,3	39
C75/40	19-0447	20-01318	60	75	40	M12	12	2957	3,2	918	7	70
C75/45	19-0448	20-01541	60	75	45	M12	12	2800	3,5	920	8	70
C75/50	C 7550	509261	60	75	50	M12	9	1390	2,9	720	8,0	39
C75/50	19-0450	20-01320	60	75	50	M12	12	2651	4,1	918	9	70
C75/55	C 7555	509262	60	75	55	M12	9	1590	3,9	860	9,7	39
C75/55	19-0451	20-00125	60	75	55	M12	12	2447	4,6	918	10,1	70
C80/40	C 8040	509263	60	80	40	M14	12	1900	2,3	820	10,6	62
C80/70	C 8070	509265	60	80	70	M14	12	1620	5,3	970	13,0	62
C80/80	C 8080	509266	60	80	80	M14	12	1650	6,1	970	14,4	62
C100/40	C 10040	509267	60	100	40	M16	14	3340	2,4	1280	8,0	95

*REFERENCE is defined as ØD/H

REFERENCE*	DRAWING NO.	PART NO.	HARDNESS (IHDR)	DIMENSIONS (mm)				COMPRESSION		SHEAR		MAX. BOLT TORQUE (Nm)
				ØD	H	Ød	T	MAX. LOAD (N)	MAX. DEFLECTION (mm)	MAX. LOAD (N)	MAX. DEFLECTION (mm)	
TYPE C STANDARD												
C100/40	19-0332	20-01324	60	100	40	M16	16	6628	2,9	1530	5,6	170
C100/55	C 10055	509268	60	100	55	M16	14	3230	3,8	1520	9,6	95
C100/55	19-0446	20-01325	60	100	55	M16	16	5200	4,9	1530	9,1	170
C100/60	C 10060	509269	60	100	60	M16	14	3060	4,2	1520	10,6	95
C100/75	C 10075	509271	60	100	75	M16	14	2730	5,4	1520	13,6	95
C100/80	C 10080	509272	60	100	80	M16	14	2650	5,8	1520	14,5	95
C100/100	C 100100	509273	60	100	100	M16	14	2440	7,4	1520	18,4	95
TYPE C CONTOURED												
C15/15	052 18 060	90767	50	15	15	M4	4	113	1,0	62	3,0	1,3
C15/15	052 18 060	90617	65	15	15	M4	4	236	1,0	120	3,0	1,3
C20/20	052 18 053	97163	50	20	20	M6	6,8	203	1,1	83	4,0	4,7
C20/20	052 18 053	97162	65	20	20	M6	6,8	376	1,1	186	4,0	4,7
C20/25	052 18 097	91741	50	20	25	M6	6,8	113	1,6	63	4,4	4,7
C20/25	052 18 097	91063	65	20	25	M6	6,8	211	1,6	123	4,4	4,7
C25/20	052 18 088	90648	65	25	20	M6	5,8	446	1,2	183	3,2	4,7
C30/25	052 18 165	91389	50	30	25	M8	7,9	354	1,6	140	4,4	11
C30/25	052 18 165	91028	65	30	25	M8	7,9	851	1,6	337	4,4	11
C30/30	052 18 069	91161	50	30	30	M8	7,9	367	2,4	164	7,5	11
C30/30	052 18 069	91062	65	30	30	M8	7,9	765	2,4	365	7,5	11
C40/30	052 18 021	91273	65	40	30	M8	7,9	710	1,5	407	5,0	11
C40/30	052 18 002	90217	50	40	30	M10	10	671	1,2	268	4,0	23
C40/30	052 18 002	90565	65	40	30	M10	10	1414	1,2	524	4,0	23
C40/30	052 18 002	91112	75	40	30	M10	10	1998	1,2	790	4,0	23
C40/40	052 18 043	92282	50	40	40	M8	7,9	418	4,0	222	12,0	11
C40/40	052 18 043	90596	65	40	40	M8	7,9	1022	4,0	450	12,0	11
C50/30	052 18 091	92163	50	50	30	M10	10	750	3,0	494	10,0	23
C50/30	052 18 091	91074	65	50	30	M10	10	1926	3,0	1002	10,0	23
C50/40	052 18 074	91110	50	50	40	M10	10	737	3,1	462	10,0	23
C50/40	052 18 074	91236	65	50	40	M10	10	1440	3,1	847	10,0	23
C50/40	052 18 074	91197	75	50	40	M10	10	2110	3,1	1288	10,0	23
C50/45	052 18 176	91402	50	50	45	M10	10	830	4,8	538	17,0	23
C50/50	052 18 112	91412	50	50	50	M10	10	529	4,0	249	10,0	23
C50/50	052 18 112	91037	65	50	50	M10	10	876	4,0	556	10,0	23
C60/45	052 18 275	93699	50	60	45	M10	10	1359	3,8	635	10,0	23
C60/45	052 18 275	93159	65	60	45	M10	10	2660	3,8	1230	10,0	23
C70/45	052 18 207	461260	50	70	45	M10	10,5	2161	3,6	879	9,6	23
C70/45	052 18 207	90772	65	70	45	M10	10,5	4176	3,6	1699	9,6	23
C70/60	052 18 077	90172	50	70	60	M12	10,5	1095	5,5	619	19,0	39
C70/60	052 18 077	90640	65	70	60	M12	10,5	2486	5,5	1481	19,0	39
C75/40	052 18 198	97233	50	75	40	M12	10,5	1575	1,5	630	5,0	39
C75/40	052 18 198	97230	65	75	40	M12	10,5	2530	1,5	1525	5,0	39
C75/40	052 18 198	97234	75	75	40	M12	10,5	4378	1,5	2162	5,0	39
C75/40	052 18 198	97229	80	75	40	M12	10,5	7350	1,5	2945	5,0	39
C75/50	052 18 082	91801	50	75	50	M12	10,5	2840	5,0	1351	14,0	39
C75/50	052 18 082	90643	65	75	50	M12	10,5	4815	5,0	2296	14,0	39
C75/50	052 18 082	91460	75	75	50	M12	10,5	5508	5,0	2607	14,0	39
C75/55	052 18 212	91045	65	75	55	M12	10,5	3861	5,0	1524	13,0	39

*REFERENCE is defined as ØD/H

Product images are graphical representations. Actual items may differ in appearance

REFERENCE*	DRAWING NO.	PART NO.	HARDNESS (IHDR)	DIMENSIONS (mm)				COMPRESSION		SHEAR		MAX. BOLT TORQUE (Nm)
				ØD	H	Ød	T	MAX. LOAD (N)	MAX. DEFLECTION (mm)	MAX. LOAD (N)	MAX. DEFLECTION (mm)	
TYPE C CONTOURED												
C75/55	052 18 212	92517	75	75	55	M12	10,5	4761	5,0	2246	13,0	39
C75/70	052 18 115	90342	50	75	70	M12	10,5	1493	8,0	1000	25,0	39
C75/70	052 18 115	90667	65	75	70	M12	10,5	3819	8,0	1770	25,0	39
C100/55	052 18 102	91611	50	100	55	M16	15,8	4463	7,0	1951	19,0	94,5
C100/55	052 18 102	90975	65	100	55	M16	15,8	10560	7,0	4429	19,0	94,5
C100/55	052 18 102	91522	75	100	55	M16	15,8	17696	7,0	8151	19,0	94,5
C100/75	052 18 049	90602	50	100	75	M16	15,8	2700	6,5	1573	20,0	94,5
C100/75	052 18 049	90603	65	100	75	M16	15,8	2681	6,5	2256	20,0	94,5
C160/75	052 18 146	90684	50	160	75	M16	15,8	5784	6,0	3500	20,0	94,5
C160/75	052 18 146	91431	65	160	75	M16	15,8	18850	6,0	9020	20,0	94,5
C200/70	052 18 162	92531	50	200	70	M16	15,8	28325	8,5	9269	23,0	94,5
C200/70	052 18 162	90618	65	200	70	M16	15,8	40704	8,5	11126	23,0	94,5

*REFERENCE is defined as ØD/H

Bobbin Type D

Bobbin mounts can be used in a wide variety of applications to permit relative movement of the suspended mass and isolation from the effects of noise, vibration and shock. The bobbin mounts are designed to have a higher compressive stiffness and a lower shear stiffness.

Typical applications:

- Light fans
- Engines and pumps
- Compressors
- Measuring and test equipment

Technical Drawing

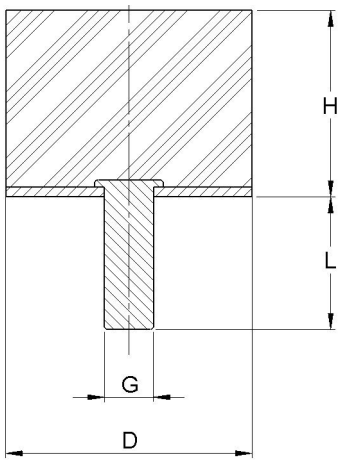

TYPE D STANDARD
& CONTOURED

Product Data

Figures stated are for natural rubber (NR). Other compound types and hardness are available upon request. The technical values are to be used for info only.
Other dimensions on special demand with minimum quantity and/or order value.

REFERENCE*	DRAWING NO.	PART NO.	HARDNESS (IRHD)	DIMENSIONS (mm)				COMPRESSION		MAX. BOLT TORQUE (Nm)
				ØD	H	Ød	L	MAX. LOAD (N)	MAX. DEFLECTION (mm)	
TYPE D STANDARD										
D13/10	D 1310	509157	60	13	10	M5	10	46	0,7	2,7
D13/13.5	D 1313	509158	60	13	13,5	M5	10	41	1,0	2,7
D13/15	D 1315	509159	60	13	15	M5	10	41	1,1	2,7
D13/20	D 1320	509160	60	13	20	M5	10	37	1,5	2,7
D15/10	D 1510	54001836	65	15	10	M4	10	87	0,8	1,3
D15/15	D 1515	54001846	65	15	15	M4	10	70	1,3	1,3
D16/10	D 1610	509161	60	16	10	M5	12	79	0,7	2,7
D16/15	D 1615	509164	60	16	15	M5	12	65	1,1	2,7
D16/20	D 1620	509165	60	16	20	M5	12	59	1,4	2,7
D16/25	D 1625	509166	60	16	25	M5	12	59	1,9	2,7
D20/8.5	D 208,5	509167	60	20	8,5	M6	16,5	172	0,5	4,7
D20/15	D 2015	509168	60	20	15	M6	16,5	112	1,0	4,7
D20/20	D 2020	509169	60	20	20	M6	16,5	99	1,4	4,7

*REFERENCE is defined as ØD/H

REFERENCE*	DRAWING NO.	PART NO.	HARDNESS (IRHD)	DIMENSIONS (mm)				COMPRESSION		MAX. BOLT TORQUE (Nm)
				ØD	H	Ød	L	MAX. LOAD (N)	MAX. DEFLECTION (mm)	
TYPE D STANDARD										
D20/25	D 2025	509170	60	20	25	M6	16,5	92	1,8	4,7
D20/30	D 2030	509171	60	20	30	M6	16,5	92	2,3	4,7
D25/10	D 2510	509172	60	25	10	M8	20	273	0,6	11
D25/15	D 2515	509173	60	25	15	M8	20	195	1,0	11
D25/19	D 2519	509174	60	25	19	M8	20	171	1,3	11
D25/22	D 2522	509176	60	25	22	M8	20	161	1,6	11
D25/25	D 2525	509177	60	25	25	M8	20	161	1,9	11
D25/30	D 2530	509178	60	25	30	M8	20	145	2,2	11
D25/40	D 2540	509179	60	25	40	M8	20	136	3,0	11
D30/15	D 3015	509180	60	30	15	M8	25	287	1,2	11
D30/22	D 3022	509181	60	30	22	M8	25	249	1,6	11
D30/30	D 3030	509182	60	30	30	M8	25	220	2,2	11
D30/40	D 3040	509183	60	30	40	M8	25	203	3,0	11
D40/20	D 4020	509184	60	40	20	M10	25	544	1,4	23
D40/25	D 4025	509185	60	40	25	M10	25	474	1,8	23
D40/35	D 4035	509186	60	40	35	M10	25	407	2,6	23
D40/40	D 4040	509187	60	40	40	M10	25	407	3,1	23
D40/45	D 4045	509188	60	40	45	M10	25	376	3,4	23
D50/20	D 5020	54001952	65	50	20	M10	28	1240	1,8	23
D50/25	D 5025	509189	60	50	25	M10	25	850	1,8	23
D50/35	D 5035	509190	60	50	35	M10	25	700	2,6	23
D50/45	D 5045	509191	60	50	45	M10	25	630	2,9	23
D60/22	D 6022	509193	60	60	22	M10	25	1551	1,5	23
D60/25	D 6025	509194	60	60	25	M10	25	1385	1,8	23
D60/36	D 6036	509195	60	60	36	M10	25	1083	2,6	23
D60/45	D 6045	509196	60	60	45	M10	25	971	3,3	23
D70/35	D 7035	509197	60	70	35	M10	25	1650	2,5	23
D70/50	D 7050	509198	60	70	50	M10	25	1351	3,7	23
D70/70	D 7070	509199	60	70	70	M10	25	1351	3,7	23
D80/25	D 8025	509201	60	80	25	M14	35	3195	1,7	62
D80/30	D 8030	509203	60	80	30	M14	35	2674	2,1	62
D80/40	D 8040	509204	60	80	40	M14	35	2140	2,9	62
D80/70	D 8070	509205	60	80	70	M14	35	1620	5,3	62
D80/80	D 8080	509206	60	80	80	M14	35	1620	6,3	62
TYPE D CONTURED										
D15/6	030 18 068	90496	65	15	6	M4	15	315	1,2	1,3
D15/13	030 18 029	91040	65	15	13	M4	15	97	1,8	1,3
D16/4	030 18 027	90308	65	16	4	M4	10	473	0,7	1,3
D20/12	030 18 055	90335	65	20	12	M6	10,5	445	2,5	4,7
D20/12	030 18 055	91589	75	20	12	M6	10,5	550	2,5	4,7
D20/16	030 18 031	97159	50	20	16	M6	18,5	149	3,4	4,7
D20/16	030 18 031	97155	65	20	16	M6	18,5	402	3,4	4,7
D20/16	030 18 031	97156	80	20	16	M6	18,5	694	3,4	4,7
D30/16	030 18 095	97197	65	30	16	M8	13	1098	3,2	11
D30/16	030 18 094	97196	65	30	16	M8	20	1098	3,2	11
D30/16	030 18 035	597193	65	30	16	M8	23	1098	3,2	11
D30/18	030 18 133	97198	65	30	18	M8	23	580	3,5	11

*REFERENCE is defined as ØD/H

REFERENCE*	DRAWING NO.	PART NO.	HARDNESS (IRHD)	DIMENSIONS (mm)				COMPRESSION		MAX. BOLT TORQUE (Nm)
				ØD	H	Ød	L	MAX. LOAD (N)	MAX. DEFLECTION (mm)	
TYPE D CONTURED										
D30/26	030 18 037	90317	65	30	26	M8	23	798	5,2	11
D40/26	030 18 039	91070	65	40	26	M10	27,5	2152	5,5	23
D40/30	030 18 120	90358	65	40	30	M8	22,5	1469	5,5	11
D40/30	030 18 023	90305	65	40	30	M10	27,5	1502	5,5	23
D50/12	030 18 026	90307	65	50	12	M10	27,5	4879	1,9	23
D50/36	030 18 041	90321	65	50	36	M10	27,5	2563	7,0	23
D50/37.5	030 18 054	500068	65	50	37,5	M10	27,5	2851	7,5	23
D70/55	030 18 043	90324	65	70	55	M12	37	2729	7,8	39
D75/20	030 18 045	597219	65	75	20	M12	37	7742	3,0	39
D75/30	030 18 137	90362	65	75	30	M12	37	7481	6,1	39
D75/45	030 18 047	91616	65	75	45	M12	37	5224	8,0	39
D160/65	030 18 165	91253	65	160	65	M16	46	30658	13,3	94,5

*REFERENCE is defined as ØD/H

Bobbin Type E

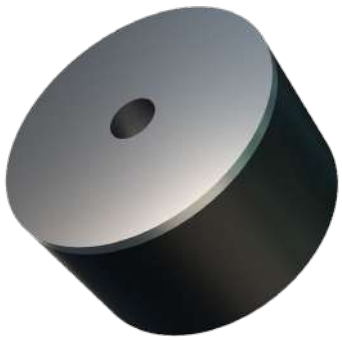

Bobbin mounts can be used in a wide variety of applications to permit relative movement of the suspended mass and isolation from the effects of noise, vibration and shock. The bobbin mounts are designed to have a higher compressive stiffness and a lower shear stiffness.

Technical Drawing

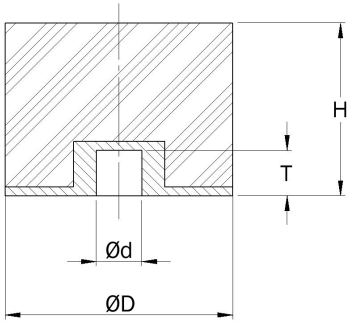

TYPE E STANDARD

Product Data

Figures stated are for natural rubber (NR). Other compound types and hardness are available upon request. The technical values are to be used for info only. Other dimensions on special demand with minimum quantity and/or order value.

REFERENCE*	DRAWING NO.	PART NO.	HARDNESS (IRHD)	DIMENSIONS (mm)				COMPRESSION		MAX. BOLT TORQUE (Nm)
				ØD	H	Ød	T	MAX. LOAD (N)	MAX. DEFLECTION (mm)	
TYPE E STANDARD										
E15/13	030 18 030	90310	65	15	13	M4	4	100	1,6	1,3
E20/12	030 18 159	90377	65	20	12	M6	6,8	223	1,6	4,7
E20/16	030 18 032	97160	65	20	16	M6	6,5	170	2,2	4,7
E30/15	E 3015	54001897	65	30	15	M8	8	390	3,5	11
E30/18	030 18 161	597200	40	30	18	M8	7,4	206	2,4	11
E30/30	E 3030	54001920	65	30	30	M8	8	275	2,3	11
E40/20	E 4020	54001932	65	40	20	M10	8	680	11,1	23
E40/30	030 18 162	90379	65	40	30	M8	8,5	793	4,1	11
E40/30	030 18 099	93047	65	40	30	M10	10	868	4,1	23
E40/40	E 4040	54001943	65	40	40	M10	8	480	11,8	23
E50/20	E 5020	54001953	65	50	20	M10	8	1240	1,8	23
E50/20	19-0350	20-00501	60	50	20	M10	10	1530	2	23
E50/36	19-0456	20-00607	60	50	36	M10	10	520	3,5	40
E50/36	19-0456	20-00502	60	50	36	M10	10	1200	3,5	40
E50/40	19-0834	20-01406	60	50	40	M10	10	1122	4,3	40
E50/45	19-0457	20-01407	60	50	45	M10	11	1071	5,1	40
E50/50	E 5050	54001980	65	50	50	M10	8	760	4,7	23
E75/20	030 18 046	97221	60	75	20	M12	9,5	5100	2,0	39
E75/30	030 18 164	90381	65	75	30	M12	10,5	4321	4,0	39
E75/30	030 18 164	500194	75	75	30	M12	10,5	6710	4,0	39
E75/45	030 18 048	92047	50	75	45	M12	10,5	1717	6,3	39
E75/45	030 18 048	91537	65	75	45	M12	10,5	3322	6,3	39
E75/45	030 18 048	90327	75	75	45	M12	10,5	5160	6,3	39
E100/69	030 18 050	91773	75	100	69	M16	15,8	8957	9,7	94,5
E160/65	030 18 166	95139	50	160	65	M16	15,8	10080	5,9	94,5
E160/65	030 18 166	91265	65	160	65	M16	15,8	18090	8,0	94,5

*REFERENCE is defined as ØD/H

Bobbin Type TA, KD, KPD

Bobbin mounts can be used in a wide variety of applications to permit relative movement of the suspended mass and isolation from the effects of noise, vibration and shock. The bobbin mounts are designed to have a higher compressive stiffness and a lower shear stiffness.

Typical applications:

- Light fans
- Engines and pumps
- Compressors
- Measuring and test equipment

Technical Drawing

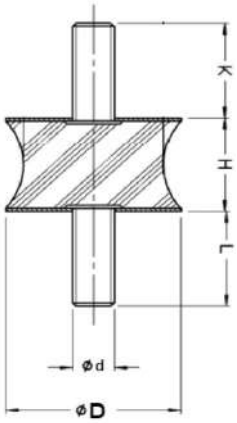

TYPE TA

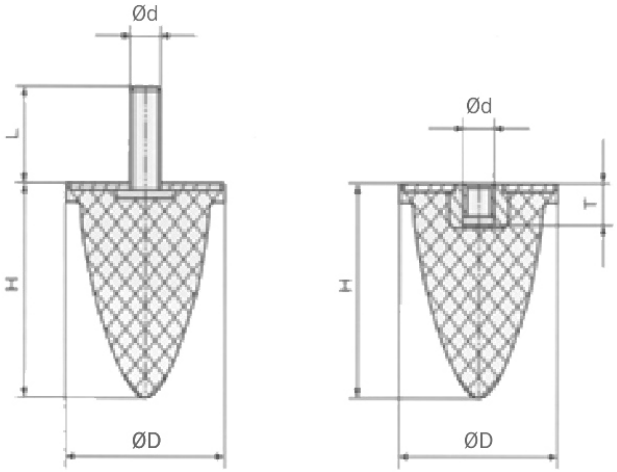

TYPE KPD

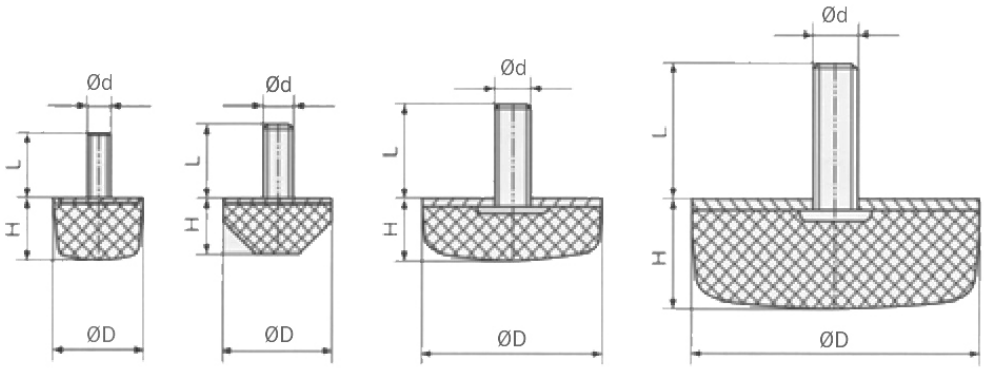

TYPE KD

Product Data

Figures stated are for natural rubber (NR). Other compound types and hardness are available upon request. The technical values are to be used for info only.
Other dimensions on special demand with minimum quantity and/or order value.

REFERENCE*	DRAWING NO.	PART NO.	HARDNESS (IRHD)	DIMENSIONS (mm)					COMPRESSION		SHEAR		MAX. BOLT TORQUE (Nm)
				ØD	H	Ød	K	L	MAX. LOAD (N)	MAX. DEFLECTION (mm)	MAX. LOAD (N)	MAX. DEFLECTION (mm)	
TYPE TA													
TA 25/20	19-0581	20-01610	60	25	20	M6	12	18	306	1	120	2	4,7
TA 40/30	19-0699	20-01647	60	41	30	M8	20	20	450	1,7	170	3,9	11

*REFERENCE is defined as ØD/H

REFERENCE*	DRAWING NO.	PART NO.	HARDNESS (IRHD)	DIMENSIONS (mm)				COMPRESSION		MAX. BOLT TORQUE (Nm)
				ØD	H	Ød	L	MAX. LOAD (N)	MAX. DEFLECTION (mm)	
TYPE KD										
KD 25/12	15-4069	10-00087	60	25	12	M6	16	306	0,8	4,7
KD 25/13	15-3452	20-00013	60	25	13	M6	16	300	0,8	4,7
KD 25/17	19-0582	20-01611	60	25	17	M6	18	290	2	4,7
KD 25/18	030 18 131	92544	60	25	18	M6	22,5	499	1,9	4,7
KD 50/17	19-0506	20-00595	60	50	17	M10	28	1550	2	23
KD 50/20	030 18 061	90337	65	50	20	M10	27,5	1285	2	23
KD 50/50	19-0851	20-01469	60	50	50	M8	23	1070	5.1	11
TYPE KPD										
KPD 30/30	19-0604	20-00686	60	30	30	M8	20	350	6	11
KPD 30/36	19-0507	20-00929	60	30	36	M8	20	350	7	11
KPD 35/40	030 18 025	49009020	50	35	40	M8	23	129	4	11
KPD 35/40	030 18 025	90306	65	35	40	M8	23	303	4	11
KPD 35/40	030 18 025	91311	75	35	40	M8	23	405	4	11
KPD 50/58	14.10235	54001982	60	50	58	M10	28	4000	35,7	23
KPD 125/78	030 18 158	90376	65	125	78	M16	46	4253	10	94,5

*REFERENCE is defined as ØD/H

Buffers

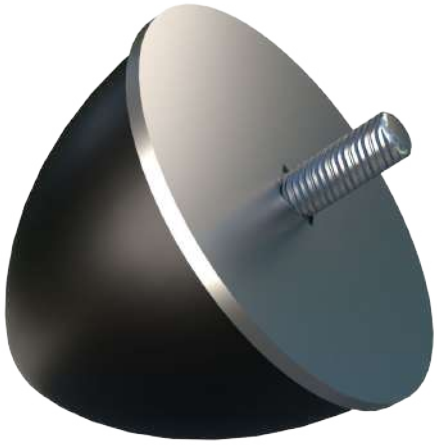

Buffers are designed to protect structures and equipment from impact forces. They are usually fitted as non-metallic stops or incorporated in vehicle suspension systems to provide progressive stiffening under increasing load. Circular and rectangular types are easily fitted.

Typical applications:

- Cranes
- Dump Trucks
- Off-Road Vehicles
- Handling Equipment
- Vehicle Suspensions

Technical Drawing

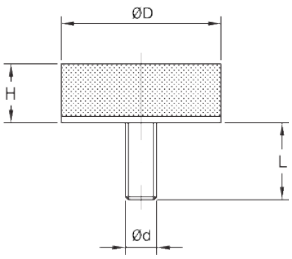

CYLINDRICAL BUFFER

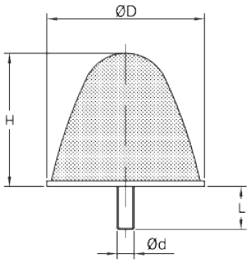

CONICAL BUFFER

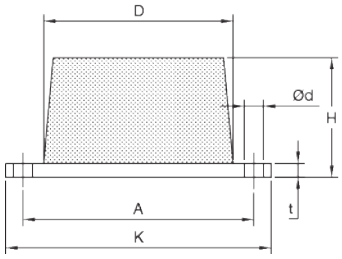

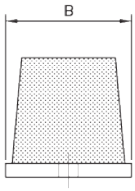

RECTANGULAR BUFFER

Product Data

DRAWING NO.	PART NO.	DIMENSIONS (mm)				MAX. LOAD (N)	MAX. DEFLECTION (mm)	MAX. BOLT TORQUE (Nm)
		ØD	H	Ød	L			
CYLINDRICAL BUFFER								
15-3463	10-00341	21	19	M6	15	1000	8	8,3
15-3459	10-00337	50,8	19	M10	25	6400	7	40
031 18 001	54001785	100	80	M16	36	45000	11	95
	54001786					70000		
CONICAL BUFFER								
15-3462	10-00340	28,6	37	M6	15	1000	18	8,3
15-3443	10-00335	108	119	M12	30	2000	60	70
15-3461	10-00339	38	38	M8	20	2500	18	20
15-3445	10-00336	108	93	M12	30	2500	53	70
15-3435	10-00334	48	51	M10	25	2700	18	40
15-3460	10-00338	70,3	46	M12	30	5000	15	70

DRAWING NO.	PART NO.	DIMENSIONS (mm)						MAX. LOAD (N)	MAX. DEFLECTION (mm)
		H	K	B	Ød	A	D		
RECTANGULAR BUFFER									
19-0564*	20-00417	22	84	32	6,7	68,5	51	8150	7
15-0260	10-00317	36,5	155,5	63,5	13,5	127	89	10000	10
15-0437	10-00322	55	120,5	47,5	8,7	104,8	86	17500	24
15-0238	10-00315	55	120,5	57	8,7	104,8	86	46000	23
	10-00316							67600	

*This part is made in oil and chemical resistant Nitrile Rubber

Cab Mount

The CAB mount has been designed to provide optimum suspension characteristics. This has been achieved through ensuring the Compression and Shear stiffness characteristics being relatively stiff in their respective directions. The CAB mounts can withstand small shock loadings to help improve driving conditions for the operator. The mount should be installed with washers top and bottom to ensure a failsafe system.

Typical applications:

- Commercial and Off-Highway vehicles
- Tractors
- Engines

Technical Drawing

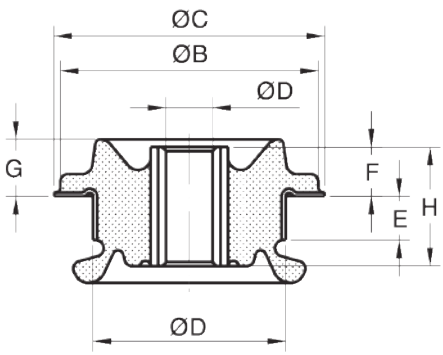

STANDARD CAB MOUNT

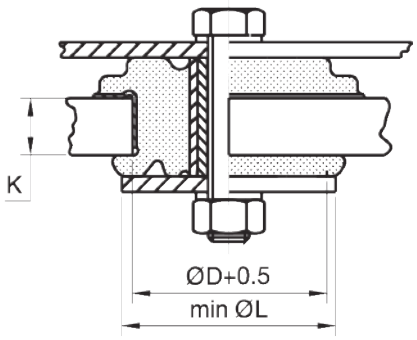

TYPICAL FITTING ARRANGEMENT

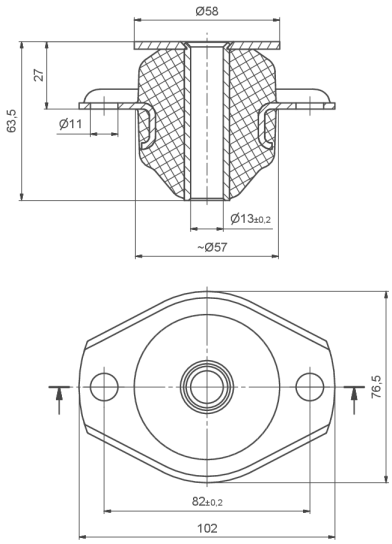

CAB MOUNT 058 18 001

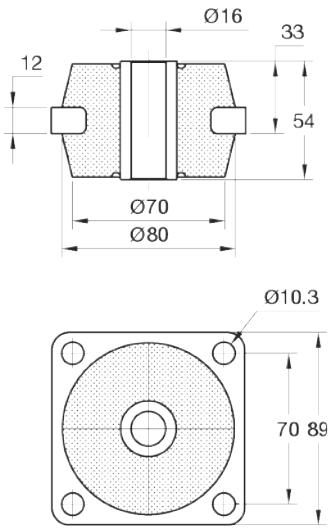

BOLTED CAB MOUNT

Product Data

DRAWING NO.	PART NO.	HARDNESS (IRHD)	DIMENSIONS (mm)										AXIAL MAX. LOAD (N)	BOLT SIZE	MAX. BOLT TORQUE (Nm)	AXIAL STIFFNESS (N/mm)	WASHER PART NO.
			ØD	ØB	ØC	Ød	E	F	G	H	K	L					
STANDARD CAB MOUNT																	
11-1028	20-00875	45	59	-	80	16	-	20	-	40	16	80	750	M16	250	390	20-00532
	20-01109	60											1500			780	
	20-01035	65											1800			950	
11-1027	20-01107	45	59	-	80	20	-	20	-	40	16	80	750	M20	380	390	20-00003
	20-00002	50											950			495	
	20-01061	55											1200			626	
	20-00874	65											1800			950	
17-1671-1	10-00563	45	75	100	105	16,5	17	19	22	46	20	105	1600	M16	180	330	20-00533
17-1650-1	10-00554	45	75	100	105	16,5	17	19	22	46	20	105	3000	M16	180	464	20-00533
	10-00555	60											5000			1200	
17-1650	10-00552	45	75	100	105	22	17	19	22	46	20	105	3000	M20	180	464	20-00533
	10-00944	60											5000			1200	
17-1814	10-00598	45	89	115	120	25	23	13	21	47	25	120	4100	M24	270	1797	20-00534
	10-00603	60											7600			3314	
	10-04461	70											11200			4870	
058 18 001	91928	50	SEE DRAWINGS										2100	M12	35	300	93950
	90827	65											4300			620	
	92539	75											6300			900	
BOLTED CAB MOUNT																	
17-0890	10-00440	45	SEE DRAWINGS										3000	M16	250	1027	20-00532
	10-00441	60											5000			1693	
	10-00442	70											7500			2000	

Product images are graphical representations. Actual items may differ in appearance

Conical Bearing

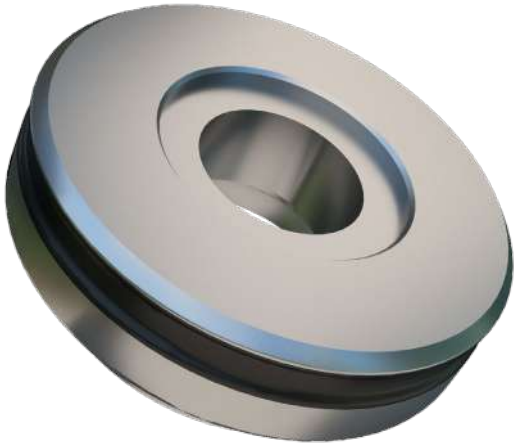

Each bush comprises of a high Tolerance conical metals with high quality natural rubber compounds featuring low creep and high tear and tensile properties. This provides for high fatigue resistance at high loads and movements. They also provide superior shock attenuation whilst providing good control in the radial and axial directions.

Conical bearings are used usually in pairs to transfer radial and axial loads whilst allowing large torsional movement and some conical. These are therefore suitable in applications where controlled flexibility is required such as in large travel suspension systems.

The high accuracy components provide:

- High fatigue life
- Wide radial load range
- High torsional movement

Technical Drawing

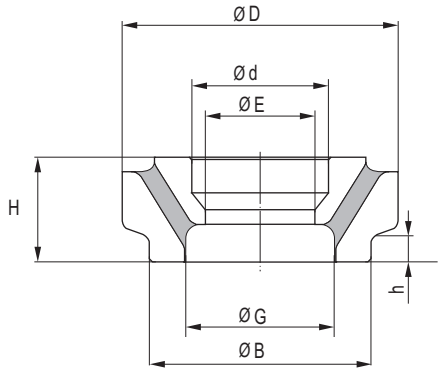

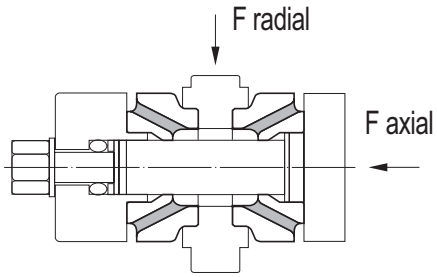

TYPICAL FITTING ARRANGEMENT
The conical bearings shall be mounted in pairs and preloaded axial roughly 0.7 mm each. Installed with an axial pre-loaded.

Product Data

DRAWING NO.	PART NO.	HARDNESS (IRHD)	DIMENSIONS (mm)							AXIAL		RADIAL STIFFNESS (N/mm)
			H	h	ØD	ØB	ØE	Ød	ØG	STIFFNESS (N/mm)	MAX. LOAD (kN)	
040 18 084	96734	65	41	9	120	90	-	46	54	34800	50	-
040 18 050	96133	50	41	10	115	90	40	60	54	130000	130	30000
040 18 902	49014124	60	41,2	7	125	90	-	46	54	60000	60	5000
040 18 876	49026815	50	41,8	10	112	90	44	55	60	17000	31	17000
	49009121	50								22000	40	22000
	49026816	65								34000	61	34000
	2129382	75								55000	99	55000
4059	54000585	-	41,8	10	125	100	54	65	70	34000	61	34000
201553	54000884	-	42,2	8	115	90	40	60	48	32000	70	3080
031 18 809	596222	70	45	9	125	90	-	46	54	10200	20	-

Note: Stiffness and load capability values are given for a pair of conical bearings.

Cushyfloat

The Cushyfloat mount is a general purpose unit designed to provide effective isolation of vibration and noise arising from both static and mobile equipment. Originally designed for use with marine engines, the Cushyfloat is a simple to install, compact, low profile mounting. It combines 3 way control of the suspended equipment with relatively large static deflections where the rubber is loaded in shear and compression.

The design incorporates bump and rebound control features which limits excessive movement under shock loading. Top metal gives protection against oil contamination and the protective finish resists corrosion attack. Propeller thrust on marine applications is accommodated. There are four sizes in the standard range with varying degrees of rubber hardness catering for point loads from 32Kg to 3000kg. Natural frequencies as low as 8Hz are possible.

Typical applications:

- Marine/Industrial vehicle engines
- Generator sets
- Pumps and compressors

* When used in marine engine application when thrust forces are involved, the maximum load capacity is substantially reduced.

Technical Drawing

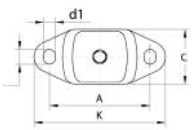

17-1600

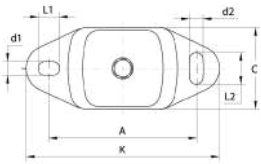

17-1609, 17-1657

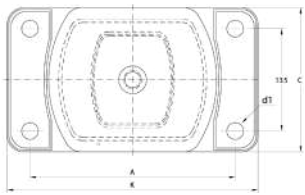

17-1841

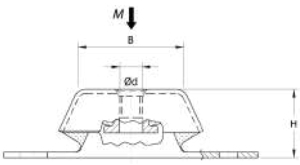

SIDE VIEW

Product Data

DRAWING NO.	PART NO.	HARDNESS (IRHD)	DIMENSIONS (mm)										MAX. LOAD (N)		MAX. THRUST LOAD (N)	VERTICAL STIFFNESS (N/mm)	MAX. BOLT TORQUE (Nm)
			B	C	A	K	H	d_1	L_1	d_2	L_2	Ød	VERTICAL	*VERTICAL WITH THRUST			
17-1600-1	10-00535	45	62	60	100	120	38-40.5	11	14	11	14	M12	500	350	370	90	25
	10-00536	55											650	550	560	135	
	10-00537	65											1000	800	830	202	
	10-04525	75											1450	1150	1200	290	
17-1609-1	10-00545	45	76	75	140	183	49	13	20	13	30	M16	1500	950	1000	220	50
	10-00546	55											2100	1400	1500	330	
	10-00547	65											3000	2100	2300	495	
	10-00548	75											4500	3150	3300	883	
17-1657-1	10-00557	45	72	112,5	182	228	70	18	26	18	34	M20	3000	2500	2800	550	100
	10-00558	55											5200	3700	4200	725	
	10-00559	65											8000	5600	6400	1075	
	10-00560	75											10000	7000	11800	1637	
17-1841-2	10-00605	40	120	190	270	330	112	22	-	-	-	M24	9500	6300	5300	1040	200
	10-00606	50											14000	9450	7100	1390	
	10-00607	60											22000	15750	12500	2450	
	10-00608	70											30000	21000	18000	3500	

DRAWING NO.	VERTICAL	LATERAL	LONGITUDINAL
17-1600-1	1	0,75	2,5
17-1609-1	1	0,7	2,7
17-1657-1	1	0,85	2,6
17-1847-2	1	0,6	2,3

Product images are graphical representations. Actual items may differ in appearance

Cushyfloat HD

The latest generation of Cushyfloat is a completely new and innovative design which offers engine manufacturers and boat builders Maximum versatility. This product has multiple performance benefits for customers whose requirements may be varied and challenging for conventional solutions.

The HD Cushyfloat has excellent performance characteristics with: Up to 10mm linear vertical deflection, with low horizontal stiffnesses. This enables improved vibration isolation – even at the low end of the engine speed range. Vertical and lateral buffering within the design limits the movement of the engine in tough service conditions.

The HD Cushyfloat provides simplicity for engines manufacturers and end users with: an interchangeable footprint with existing mountings; minimizing retrofit installation issues.

The entire range can be formulated from just three rubber mixes; therefore reducing inventory requirements and the complexity of product selection.

Installation is aided by sighting grooves so that it is easy to align the engine, and ensure the correct load distribution.

More cost effective product life and serviceability due to its modular design. Upon refurbishment, the outer casting can be re-used.

Typical applications:

- Marine/Industrial vehicle engines
- Generator sets
- Pumps and compressors

Technical Drawing

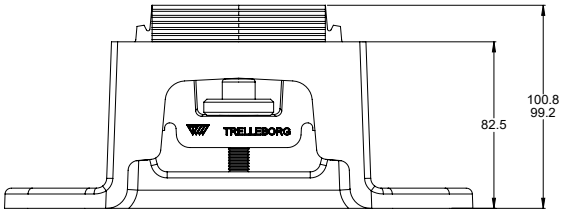

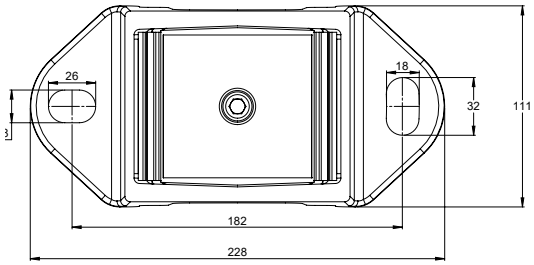

Product Data

DRAWING NO.	PART NO.	HARDNESS (IRHD)	MAX. LOAD (kN)	MAX. THRUST LOAD (kN)	MAX THRUST (kN)		STATIC STIFFNESS (N/mm)	MAX. BOLT TORQUE (Nm)
					CONTINUOUS	INTERMITTENT		
17-4726-1	10-02308	40	2,20	1,55	2,45	3,19	270	170
	10-02108	50	3,20	2,20	3,67	4,78	390	
	10-02109	60	4,70	3,30	5,51	7,16	575	
17-4792-1	10-02159	40	5,30	3,70	5,33	6,93	650	170
	10-02114	50	7,35	5,15	7,96	10,35	900	
	10-02160	60	9,80	6,85	14,7	19,11	1200	

Cushyfloat Mini HD

The Cushyfloat Mini HD mount combines 3 way control of suspended equipment with large static deflections where the rubber is loaded in shear and compression. The design incorporates bump and rebound control features which limits excessive movement under shock loading. The easy to install mount features a prominent use of lightweight engineered plastics which offer greater environmental protection with no compromise in product performance.

Benefits:

- Large linear vertical deflection
- Similar stiffness ratios to same footprint part (17/1609)
- Corrosion resistant materials
- Lightweight part (0.45kg)
- Modular and failsafe design
- Wide loading capability.

Typical applications:

- Marine, industrial and vehicle engines
- Generator sets
- Pumps
- Compressors
- Refrigeration systems

Technical Drawing

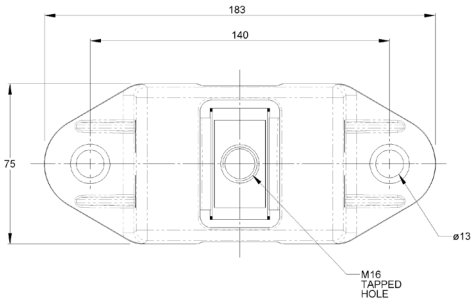

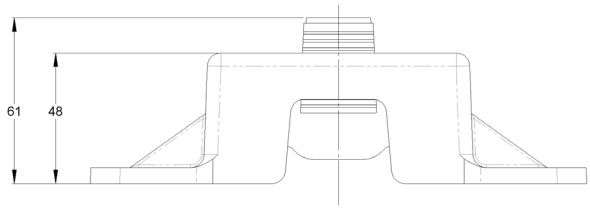

Product Data

DRAWING NO.	PART NO.	HARDNESS (IRHD)	MAX. LOAD (N)	MAX. THRUST LOAD (N)	STATIC STIFFNESS (N/mm)	MAX. BOLT TORQUE (Nm)
17-4944-1	10-02322	50	1000	910	130	60
	10-02036	60	1600	1120	210	
	10-02037	70	2200	1540	280	

DRAWING NO.	VERTICAL	LATERAL	LONGITUDINAL
17-4944-1	1	0,3	2,5

Cushyfloat HT

The Cushyfloat HT (High Thrust) mounting has been developed to meet the increased torque output and higher thrust load requirements of many modern marine power units. By careful design of the rubber section, relatively high degrees of flexibility in the vertical and lateral modes are combined with high stiffness in the longitudinal fore and aft direction, thereby giving good vibration isolation properties and minimum movement under thrust forces.

The design incorporates bump and rebound control features which limit excessive movements under shock loading. The mountings have a high inbuilt tensile strength which renders them suitable for the suspension of power units in lifeboat applications. The top gives protection against oil contamination and the protective finish resists corrosion attack. Two designs and different rubber compounds allow loads between 85 and 1070Kg to be accommodated.

Typical applications:

- Marine Engines

Technical Drawing

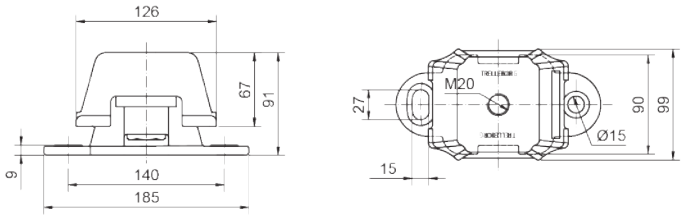

17-2182

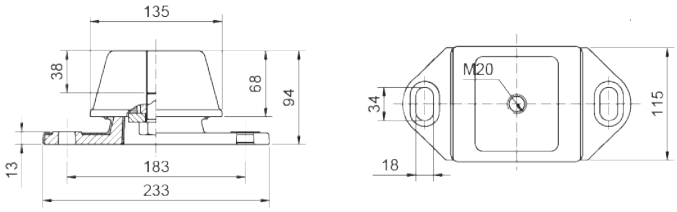

17-1990

Product Data

DRAWING NO.	PRODUCT NO.	HARDNESS (IRHD)	MIN VERTICAL LOAD (N)	MAX. VERTICAL LOAD (N)	STATIC STIFFNESS (N/mm)	MIN DEFLECTION (mm)	MAX DEFLECTION (mm)	MAX. BOLT TORQUE (Nm)
17-2182-1	10-01143	35	846	1397	400	3	5	100
	10-01144	45	1254	2090	1000			
	10-03014	55	2039	3394	960			
	10-02930	65	3007	4995	1530			
17-1990-1	10-01150	45	1498	5708	1600	1	4	100
	10-03146	60	2956	10703	3000			

DRAWING NO.	VERTICAL	LATERAL	LONGITUDINAL
NOMINAL STIFFNESS RATIOS			
17-2182-1	1	0,85	6
17-1990-1	1	0,25	9

Cushyfoot

Cushyfoot have two rubber elements, used in shear and compression, to provide excellent stiffness characteristics for the isolation of a wide range of vibration frequencies. The load range varies from 50 to 1280 kg per mounting and will provide up to 16 mm
static deflection.

Features:

- A wide load range from 50 to 1280 kg
- Strong casting for safety and reliability
- Dissimilar horizontal stiffness gives optimum isolation and motion control

Typical applications:

- Diesel engines
- Generator sets
- Compressors
- Fans
- Hydraulic units
- Lift machinery

Technical Drawing

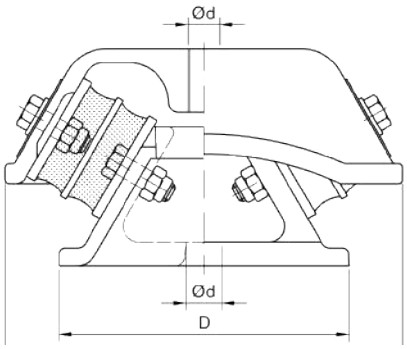

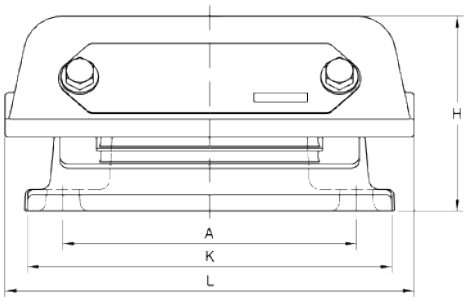

Product Data

REFERENCE	DRAWING NO.	PART NO.	HARDNESS (IRHD)	DIMENSIONS (mm)								STATIC STIFFNESS (N/mm)	MAX. LOAD (kN)
				L	B	A	K	H	D	Ød	G		
A3	050 18 001	96808	50	121	127	90	115	72	83	11	M12	240	1,50
		49047069									M16		
A2		96806	50								M12	310	1,90
		49041129									M16		
A1		96809	65								M12	520	3,10
		49047070									M16		
A0		96807	75								M12	900	5,30
		49047071									M16		
A3	17-0290-1	20-00689	45	122	132	90	114	72	82	13	M16	160	1,20
A1		10-04251	60									300	2,30
A0		10-04116	70									545	3,50
HD3	050 18 004	596744	50	228	203	165	203	120	146	17,5	M16	450	5,00
HD2		96800	60									770	8,50
HD1		96920	65									860	9,50
HD0		96801	75									1140	12,50
B3	050 18 002	96802	50	228	203	165	203	110	146	17,5	M16	1080	6,50
B2		96805	60									1580	9,50
B1		96804	65									2080	12,50
B0		96803	75									2670	16,00
B3	17-0213-1	10-04106	45	230	204	165	205	110	148	18	M16	720	5,90
B1		10-04104	60									1460	12,50
HD3	17-0346-1	10-04123	45	230	204	165	205	123	148	18	M16	390	6,30
HD1		10-04120	60									785	12,80

EH Mount

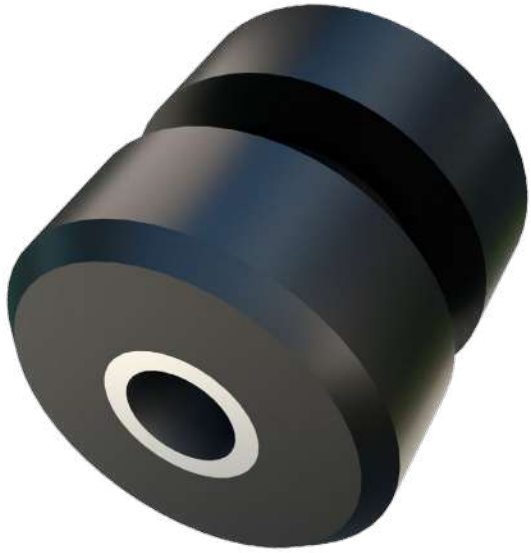

The EH is designed primarily for mobile applications where high dynamic and shock forces are encountered. Dynamic vertical movements in both the directions are restricted and excellent horizontal stability is provided.

Features:

- Dynamic efficiency in all directions
- Attenuation of structure-borne noise
- Accommodation of misalignment and distortion
- Simple design-easy to install
- Fail-safe installation
- Wide load range, 40 to 1200 kg

Typical applications:

- Military vehicles
- Agriculture vehicles
- Construction equipment
- Transport machinery
- Industrial mobile machinery

Technical Drawing

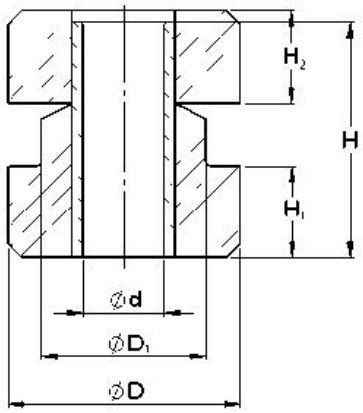

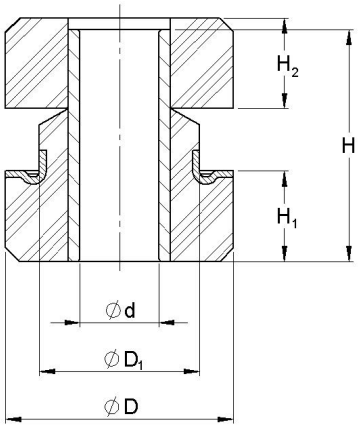

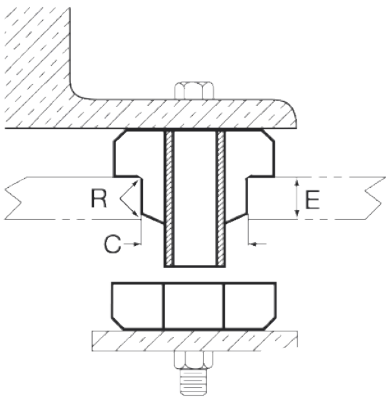

MACHINE IN OPERATION

Product Data

REFERENCE	DRAWING NO.	PART NO.	HARDNESS	DIMENSIONS (mm)									AXIAL STIFFNESS (N/mm)	MAX. LOAD (N)	BOLT SIZE	MAX. BOLT TORQUE (Nm)	WASHER PART NO.
				Ød	ØD	$ØD_1$	H	H_1	H_2	C	E	R					
TYPE II																	
EH 3334	55-1070-1	20-02654	40 IRHD (CR)	10	33	20	34	12	12	19	10	1	-	400	M10	25	20-02816
EH 3334	55-1070-1	20-02901	60 IRHD	10	33	20	34	12	12	19	10	1	-	900	M10	25	20-02816
EH 3330	039 18 753	49031354	40 (CR)	9	33	20	30	11	11	20,5	9	1	270	970	M6 / M8	7,5 / 11	-
EH 3330	039 18 753	49044363	75 (CR)	9	33	20	30	11	11	20,5	9	1	1450	5220	M6 / M8	7,5 / 11	-
EH 4850	19-0213-1	20-00621	40 IRHD	13	48	32,6	50	20	20	31,8	15	1,5	430	600	M12	40	20-00416
EH 4850	19-0213-1	20-01504	40 IRHD (CR)	13	48	32,6	50	20	20	31,8	15	1,5	430	600	M12	40	20-00416
EH 4850	19-0213-1	20-00620	60 IRHD	13	48	32,6	50	20	20	31,8	15	1,5	865	1000	M12	40	20-00416
EH 4850	19-0213-1	20-01510	60 IRHD (CR)	13	48	32,6	50	20	20	31,8	15	1,5	865	1000	M12	40	20-00416
EH 4850	19-0213-1	20-02656	75 IRHD (CR)	13	48	32,6	50	20	20	31,8	15	1,5	146	1750	M12	40	20-00416
EH 4850	039 18 754	49011344	40 (CR)	13,5	48	33	50	20,5	19,5	33,5	12	1,5	200	800	M10 / M12	47 / 39	-
EH 4850	039 18 754	511454	65 (CR)	13,5	48	33	50	20,5	19,5	33,5	12	1,5	470	1900	M10 / M12	47 / 39	-
EH 4850	039 18 765	49029937	45 (CR)	9	48	33	50	20,5	19,5	33,5	13	1,5	340	1360	M8	40	-
EH 4850	039 18 765	49038236	50 (CR)	9	48	33	50	20,5	19,5	33,5	13	1,5	340	1360	M8	40	-
EH 4850	039 18 765	49038235	60 (CR)	9	48	33	50	20,5	19,5	33,5	13	1,5	730	2900	M8	40	-
EH 4850	039 18 765	49038234	75 (CR)	9	48	33	50	20,5	19,5	33,5	13	1,5	1160	4600	M8	40	-
EH 6463	19-0214-1	20-00619	40 IRHD	17	64	40	62	23	23	39	22	2,3	585	900	M16	80	20-01495
EH 6463	19-0214-1	20-02499	50 IRHD	17	64	40	62	23	23	39	22	2,3	900	1300	M16	80	20-01495
EH 6463	19-0214-1	20-00618	60 IRHD	17	64	40	62	23	23	39	22	2,3	1420	2000	M16	80	20-01495
EH 6463	19-0214-1	20-01860	70 IRHD	17	64	40	62	23	23	39	22	2,3	2087	3000	M16	80	20-01495
EH 6463	039 18 768	49038161	45 (CR)	16,7	64,8	40,1	61,7	22,9	22,9	40,6	20	2,3	545	2200	M12	39	-
EH 6463	039 18 768	49038160	60 (CR)	16,7	64,8	40,1	61,7	22,9	22,9	40,6	20	2,3	1230	4900	M12	39	-
EH 6463	039 18 773	49043630	50 (CR)	14	64,8	40,1	61,7	22,9	22,9	40,6	20	2,3	650	2600	M12	105	-
EH 6463	039 18 773	60905067	60 (CR)	14	64,8	40,1	61,7	22,9	22,9	40,6	20	2,3	1000	4000	M12	105	-
EH 9075	19-0727-1	20-00617	40 IRHD	23	89	58	73	25	25	57,2	28	3	1056	2000	M22	200	20-00533
EH 9075	19-0727-1	20-02835	45 IRHD (CR)	23	89	58	73	25	25	57,2	28	3	1330	2300	M22	200	20-00533
EH 9075	19-0727-1	20-02836	50 IRHD (CR)	23	89	58	73	25	25	57,2	28	3	1800	2950	M22	200	20-00533
EH 9075	19-0727-1	20-02837	55 IRHD (CR)	23	89	58	73	25	25	57,2	28	3	2200	3700	M22	200	20-00533
EH 9075	19-0727-1	20-00616	60 IRHD	23	89	58	73	25	25	57,2	28	3	2400	4500	M22	200	20-00533
EH 9075	19-0727-1	20-01508	60 IRHD (CR)	23	89	58	73	25	25	57,2	28	3	2400	4500	M22	200	20-00533
EH 9075	039 18 766	49042472	45 (CR)	21	89	58,4	73	25,4	23	58,9	29	3	980	3900	M16 / M20	126 / 147	-
EH 9075	039 18 766	49033624	45 (CR)	21	89	58,4	73	25,4	23	58,9	29	3	980	3900	M16 / M20	126 / 147	Included
EH 9075	039 18 766	49042473	50 (CR)	21	89	58,4	73	25,4	23	58,9	29	3	1060	4200	M16 / M20	126 / 147	-
EH 9075	039 18 766	49036771	50 (CR)	21	89	58,4	73	25,4	23	58,9	29	3	1060	4200	M16 / M20	126 / 147	Included
EH 9075	039 18 766	49042474	60 (CR)	21	89	58,4	73	25,4	23	58,9	29	3	1600	6400	M16 / M20	126 / 147	-
EH 9075	039 18 766	49036770	60 (CR)	21	89	58,4	73	25,4	23	58,9	29	3	1600	6400	M16 / M20	126 / 147	Included
EH 9075	039 18 766	49042475	75 (CR)	21	89	58,4	73	25,4	23	58,9	29	3	5200	20000	M16 / M20	126 / 147	-
EH 9075	039 18 766	49036769	75 (CR)	21	89	58,4	73	25,4	23	58,9	29	3	5200	20000	M16 / M20	126 / 147	Included
EH 1127	13-4109-1	20-02876	70 IRHD	37,8	124	64,8	85,9	31,8	31,8	64	31,8	4	6497	17500	M24	300	CONTACT FOR DETAILS
EH 1127	039 18 774	49045418	60 (CR)	25	124	64	87	32	32	64,5	28	4	5612	22500	M20 / M24	184 / 255	-
TYPE III																	
EH 4850	039 18 755	49012351	40 (CR)	13,5	48	31,5	50	20,5	19,5	31,5	13	1,5	335	1000	M10 / M12	47 / 39	-
EH 4850	039 18 755	2129379	55 (CR)	13,5	48	31,5	50	20,5	19,5	31,5	13	1,5	600	1800	M10 / M12	47 / 39	-
EH 4850	039 18 755	511452	65 (CR)	13,5	48	31,5	50	20,5	19,5	31,5	13	1,5	1030	3100	M10 / M12	47 / 39	-
EH 4850	039 18 755	49003069	75 (CR)	13,5	48	31,5	50	20,5	19,5	31,5	13	1,5	1300	3900	M10 / M12	47 / 39	-

Equi-frequency Small

This is a general purpose low-profile mount for use where space is restricted. Best suited for stationary applications. May also be used to protect delicate or sensitive equipment from shock or disturbances.

Each design has the same stiffness in vertical and horizontal directions and can be used as small anti-shock mounting when static loadings are derated.

Typical applications:

- Instrumental panels
- Small fan sets
- Small vacuum pumps
- Small reciprocating engines

Technical Drawing

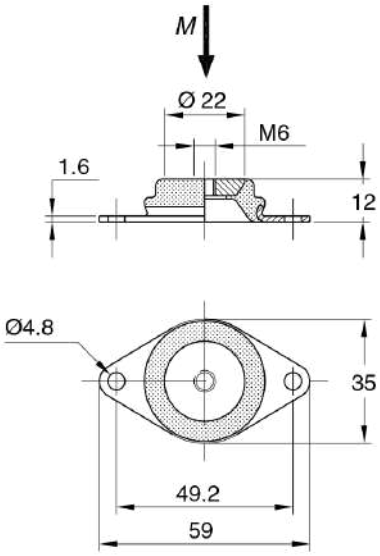

17-1566

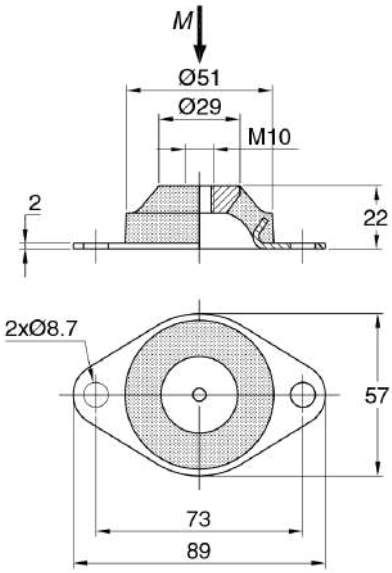

17-0389

Product Data

DRAWING NO.	PART NO.	HARDNESS (IRHD)	MAX. LOAD (N)	STIFFNESS (N/mm)	MAX. BOLT TORQUE (Nm)
17-1566	10-00529	45	110	75	7
	10-00530	60	220	130	
17-0389-5	10-00406	45	270	100	20
	10-00407	60	540	180	

Product images are graphical representations. Actual items may differ in appearance

GK Mount

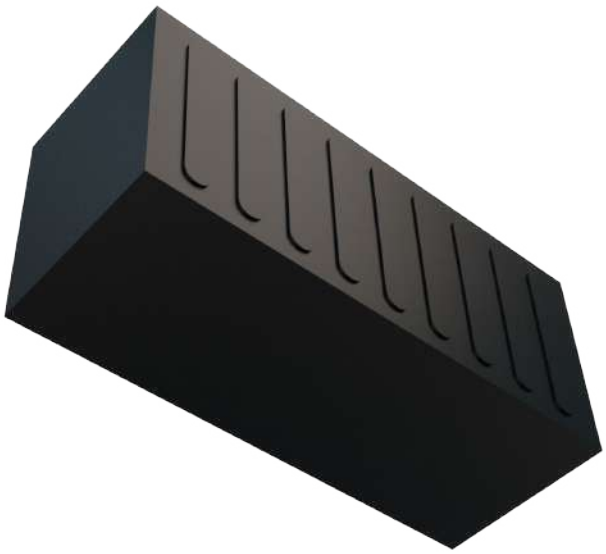

The GK Mount is specifically designed for isolation of heavy machinery with low interfering frequencies. It is widely used under concrete foundations supporting heavy machinery.

The long narrow section enables the GK to be suitable for fitting under a universal structural framing. Type GK is a heavy duty mounting with excellent flexible characteristics in both vertical and lateral planes. Deflection up to 30mm is possible, making the GK suitable for installations with low disturbing frequencies. Installation is simple, eliminating traditional methods of attachment to machinery or support structure.

Typical applications:

- Mixers
- Converters
- Paper mills
- Gearboxes
- Industrial fans
- Sound enclosures
- Floating structures

Technical Drawing

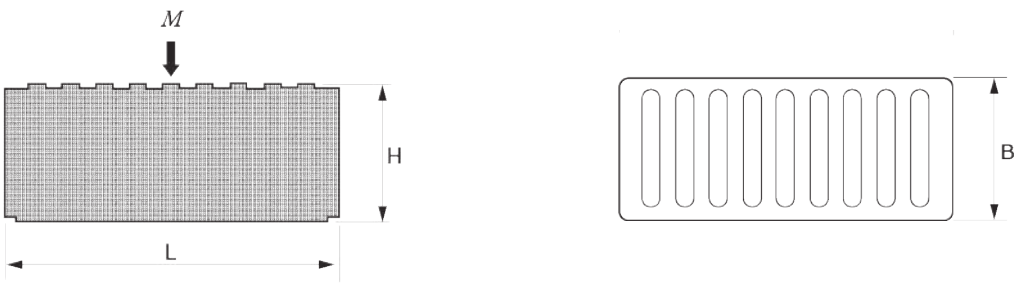

Product Data

REFERENCE	DRAWING NO.	PART NO.	DIMENSIONS (mm)			MAX. LOAD (kN)
			L	B	H	
GK0-60	15-4041	10-00085	195	175	150	1,8
		10-00101				3,8
GK1-40	15-4042	10-00008	400	175	150	4
GK1-60		10-00009				8

Height Adjusters

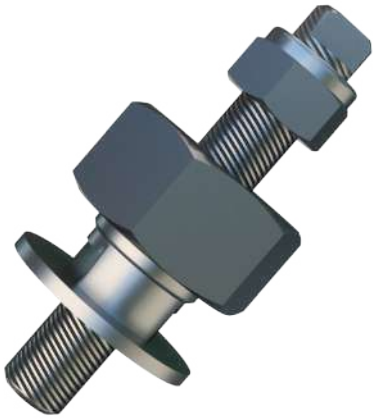

Height Adjusters (HA) are available in various sizes to suit the small and medium range of Trelleborg AVS mountings. It allows mounts to be retrofitted to existing installations where original spares are unobtainable.

The HA range are made in corrosion protected grade 8 steel. The steel is zinc plated. The Height Adjuster is supplied complete with washer and nut for fastening to the mounting and two nuts and a lock washer for the engine foot fastening. The Height Adjusters allow ease of aligning when installing equipment.

When installing secure the bolt into the mounting, it is recommended to apply thread lock adhesive. For optimum solutions where close coupling Tolerances are required, allow the mountings to settle for 48 hours before final alignment of the engine installation.

Note: For all applications with Thrust loading, it is recommended that the HAD type height adjusters must be used. On request, Trelleborg AVS application engineers can make the necessary calculations for the Anti Vibration and Shock Systems using Vibration Software. For optimum solutions where close coupling tolerances are required, allow the mountings to settle for 48 hours before final alignment of the engine installation. For securing the bolt into the mounting, it is recommended threadlock be applied.

Technical Drawing

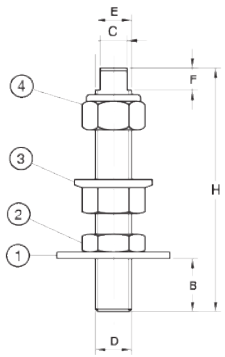

HA

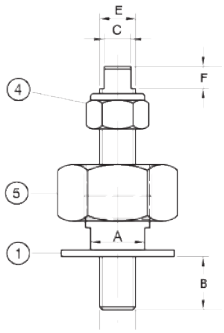

HAD

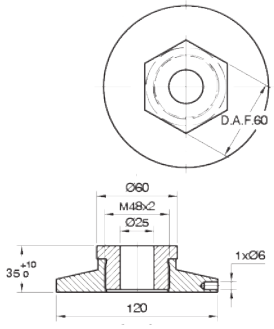

HAD 24/24

Product Data

REFERENCE	DRAWING NO.	PART NO.	DIMENSIONS (mm)							WASHER (1)	HEXAGON THIN NUT (2)	HEXAGON FLANGE NUT (3)	LOCK NUT PLASTIC INSERT (4)	FINE THREAD ADJUSTING UNIT (5)
			H	D	E	A	B	C	F					
HA														
HA 12/12	18-2210A	40-04704	95	M12	M12	-	20	8 A/F	8	37*12*3	M12	M12	M12	-
HA 12/16	38-1600H	40-06068	105	M12	M16	-	20	12 A/F	10	44*15*3	M16	M16	M16	-
HA 16/16	18-2210C	40-04705	110	M16	M16	-	24	12 A/F	10	50*15*3	M16	M16	M16	-
HA 16/20	18-2210D	20-00511	130	M16	M20	-	24	12 A/F	10	56*20*4	M20	M20	M20	-
HA 20/20	18-2210E	40-02515	135	M20	M20	-	30	12 A/F	10	60*21*4	M20	M20	M20	-
HAD														
HAD 12/16	18-2210F	20-00513	105	M12	M16	24 A/F	20	12 A/F	10	44*15*3	-	-	M16	M30*1.5
HAD 16/16	18-2210G	20-00514	110	M16	M16	24 A/F	24	12 A/F	10	50*15*3	-	-	M16	M30*1.5
HAD 16/20	18-2210H	20-00515	130	M16	M20	27 A/F	24	12 A/F	10	56*20*4	-	-	M20	M36*2
HAD 20/20	18-2210J	20-00516	135	M20	M20	27 A/F	30	12 A/F	10	60*21*4	-	-	M20	M36*2
HAD 24/24	18-2210K	20-00517	SEE DRAWING											
-	033 18 710	49018052	135	M12	M20x1,5	-	15	SW8	10	B13 DIN 9021	SW19	-	SW18	SW30
-	033 18 709	49039256	135	M16	M24x1,5	-	20	SW12	10	B17 DIN 9021	SW22	-	SW24	SW36
-	033 18 708	49011255	135	M20	M33x2	-	25	SW15	10	B22 DIN 9021	SW27	-	SW30	SW50
-	033 18 707	49039258	160	M24	M36x1,5	-	30	SW18	10	B26 DIN 9021	SW27	-	SW36	SW55

Product images are graphical representations. Actual items may differ in appearance

Hydro Bush

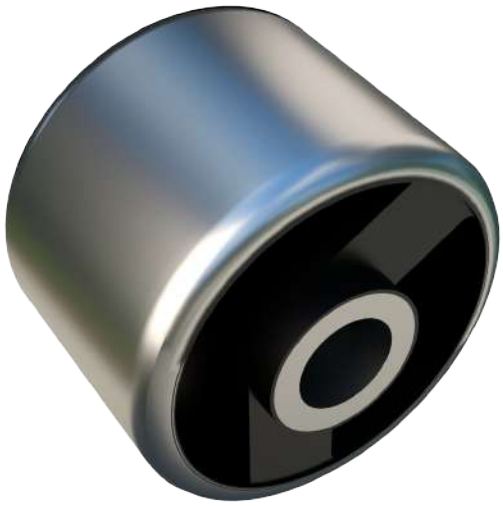

Hydro bushes are elastomer springs with integrated hydraulic damping. Suitable for mountings of combustion engines, cabs, pumps and compressors, mainly in agricultural machines and construction machinery. They are specifically suited when low frequencies occur as excitation frequency in the mount system. They achieve a high damping in the natural frequency range of the system as well as gut isolation properties above this range. All Hydro Bushes are galvanised to give extra resistance against corrosion. HD Hydro Bushes have a metal core which limits movement in z-direction.

Typical applications:

- Engine mounts
- Cab mount
- Pumps
- Compressors
- Industrial fans
- Sound enclosures
- Floating structures

Technical Drawing

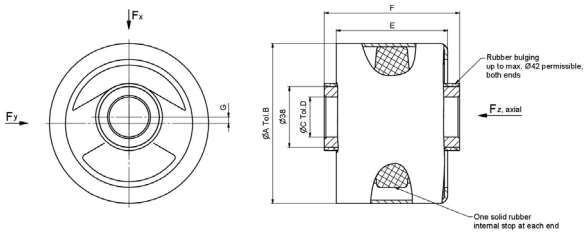

HYDRO BUSH

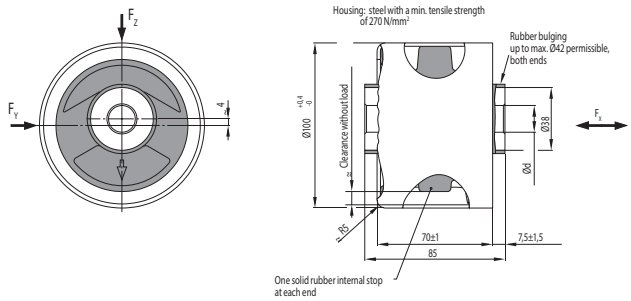

HD-RATED HYDRO BUSH

Product Data

DRAWING NO.	PART NO.	HARDNESS (IRHD)	DIMENSIONS (mm)				AXIAL		RADIAL (Z)		RADIAL (Y)	
			ØD	Tolerance for ØD	Ød	Tolerance for Ød	STIFFNESS (N/mm)	MAX. LOAD AT S=3mm (N)	STIFFNESS (N/mm)	MAX. LOAD (N)	STIFFNESS (N/mm)	MAX. LOAD AT SY=2mm (N)
HYDRO BUSH												
046 18 013	95573	40	100	-0/+0.22	25	-0/+0.052	110	330	220	1100	300	600
046 18 711	49022801	40	100	-0/+0.4	32	-0/+0.062	110	330	220	1100	300	600
046 18 014	595574	50	100	-0/+0.22	25	-0/+0.052	220	660	320	1600	600	1200
046 18 708	507315	50	100	-0/+0.22	32	-0/+0.062	220	660	320	1600	600	1200
046 18 015	595575	60	100	-0/+0.4	25	-0/+0.052	330	990	500	2500	830	1660
046 18 714	49022864	60	100	-0/+0.4	32	-0/+0.062	330	990	500	2500	830	1660
046 18 016	595576	65	100	-0/+0.4	32	-0/+0.062	425	1275	685	3450	1070	2140
046 18 017	95676	70	100	-0/+0.4	32	-0/+0.062	520	1560	840	4200	1300	2600
HD - RATED HYDRO BUSH												
046 18 712	49022862	40	100	-0/+0.4	32	-0/+0.062	110	330	220	1100	300	600
046 18 713	49022863	50	100	-0/+0.4	32	-0/+0.062	220	660	320	1600	600	1200
046 18 705	477895	60	100	-0/+0.22	32	-0/+0.062	330	990	500	2500	830	1660
046 18 715	49022865	65	100	-0/+0.4	32	-0/+0.062	425	1275	685	3450	1070	2140
046 18 702	600984	70	100	-0/+0.4	32	-0/+0.062	520	1560	840	4200	1300	2600

Hydro Mount DL

The Hydro Mount DL, as a hydraulically damping rubber mount, solved the designer's conflict of how to mount a mass that is excited by wide frequency spectrum. Particularly if low frequencies – between 5 Hz and 15 Hz – can occur as the excitation frequency, on the one hand high damping in the natural frequency range of the system, and on the other, a good isolation property above this natural frequency (supercritical mounting) is necessary.

Typical applications:

- Pumps
- Compressors
- Utility vehicle engine mount
- Marine engine mount
- Driver cab mount

Technical Drawing

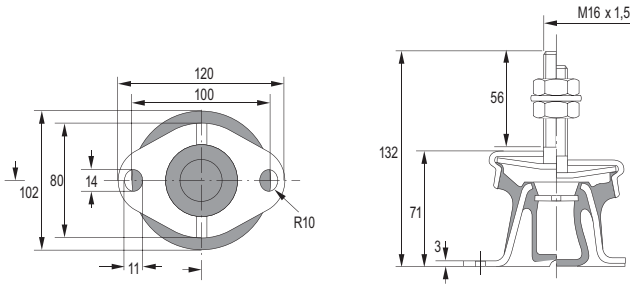

HYDRO MOUNT DL / HD

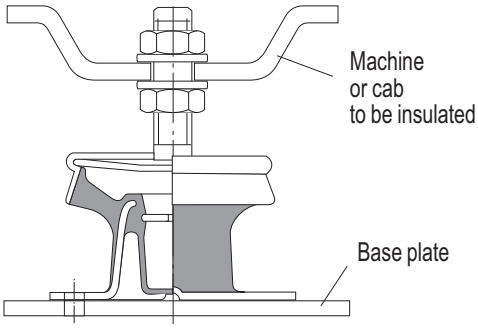

TYPICAL FITTING ARRANGEMENT

Product Data

DRAWING NO.	PART NO.	HARDNESS (IRHD)	AXIAL		RADIAL	CORROSION PROTECTION
			STIFFNESS AT SZ=2.5 mm (N/mm)	MAX. LOAD (N)	STIFFNESS AT SZ=5 mm (N/mm)	
HYDROMOUNT DL						
036 18 026	93638	50	142	700	143	Black Coated
036 18 028	93639	60	243	1200	200	Black Coated
036 18 029	93640	65	350	1700	230	Black Coated
HYDROMOUNT DL (HD*)						
036 18 700	511065	65	350	1700	230	Black Coated
036 18 701	2129442	60	243	1200	200	Black Coated
036 18 702	49022858	50	142	700	143	Black Coated

*HD stands for High durability at high amplitudes.

Hydro Mount VL

The mount design, the chosen fluid and the hydraulic mechanism provide the characteristic wide-band damping. In cases with remote excitation frequencies in the lower frequency range, the use of this hydro mount permits an optimal mounting. By precise reduction of the fluid chamber stiffness of one of the chambers, a significantly improved compromise of effective vibration reduction and structure-borne sound isolation is achieved as opposed to the hydro mounts without this design.

Typical applications:

- Agriculture engines
- Construction vehicle engines
- Industrial vehicles
- Forest machinery
- Pumps and compressors

Technical Drawing

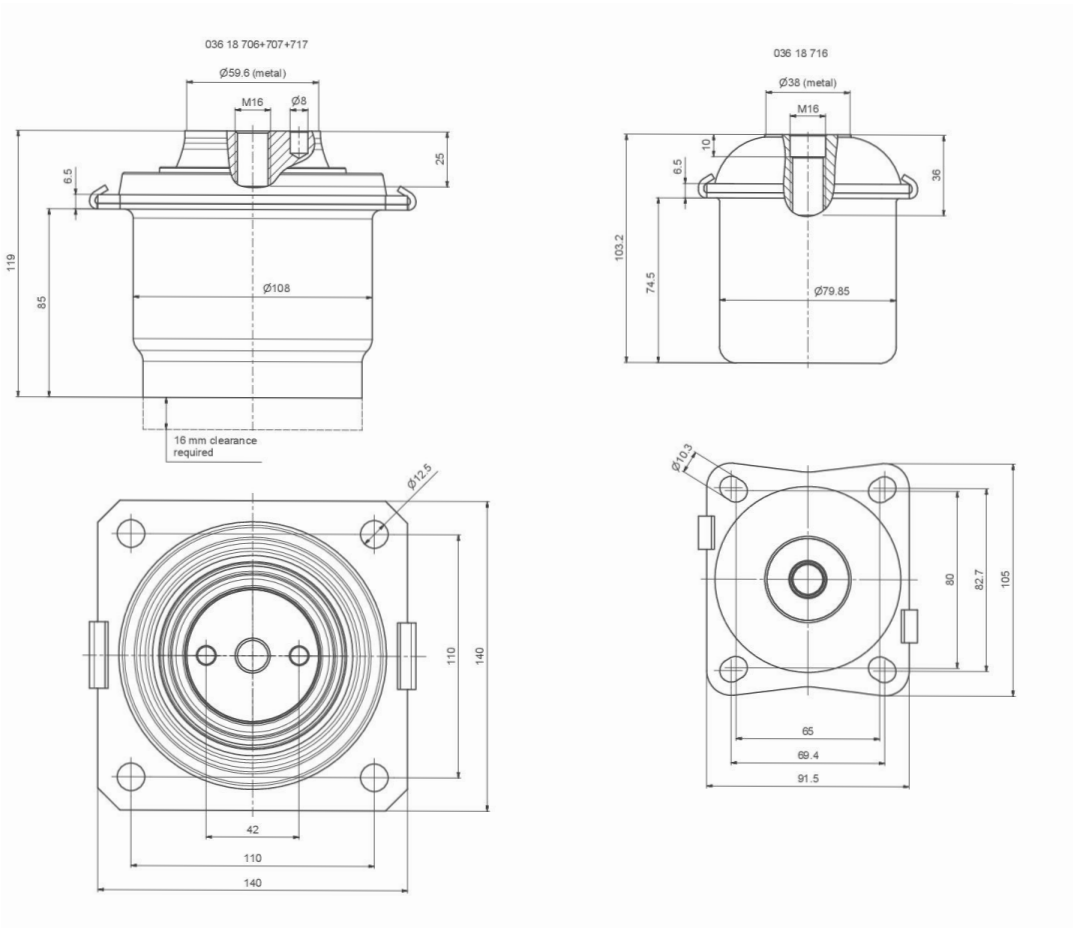

Product Data

DRAWING NO.	PART NO.	HARDNESS (IRHD)	AXIAL		RADIAL (X)
			STIFFNESS (N/mm)	MAX. LOAD (kN)	STIFFNESS (N/mm)
036 18 716	60901792	40	490	3,05	900 (at Sz=-4mm, Sx=1,5mm)
	60900463	50	730	5,10	1700 (at Sz=-4mm, Sx=1mm)
	60901793	60	970	7,80	2850 (at Sz=-4mm, Sx=1,5mm)
	60901794	70	1420	11,30	3560 (at Sz=-4mm, Sx=1,5mm)
036 18 707	49039040	40	210	2,10	270
	49039041	45	270	2,70	350
	49039082	50	300	3,00	450
	49039083	55	360	3,60	600
	49039084	60	480	4,80	830
	49039085	65	570	5,70	1100
	60901160	70	690	6,50	1450*
036 18 706	49039034	40	300	3,00	500
	49039035	45	390	3,90	650
	49039036	50	460	4,60	800
	49039037	55	550	5,50	1100
	49039038	60	700	7,00	1500
	49039039	65	950	8,80	1950

Instrument Mount

Instrument mounts are utilised for vibration insulation of electronic components, measuring devices and precise mechanical apparatuses and for instrument panels or control panels in industrial applications. A common requirement of these mounts is that they keep vibrations or shock loads introduced via the anchorages away from the instrument or device. The mounts help to protect sensitive instruments from external shock loads in mobile and non mobile use.

Typical applications:

- Small fan sets
- Transformers
- Sensitive equipment

Technical Drawing

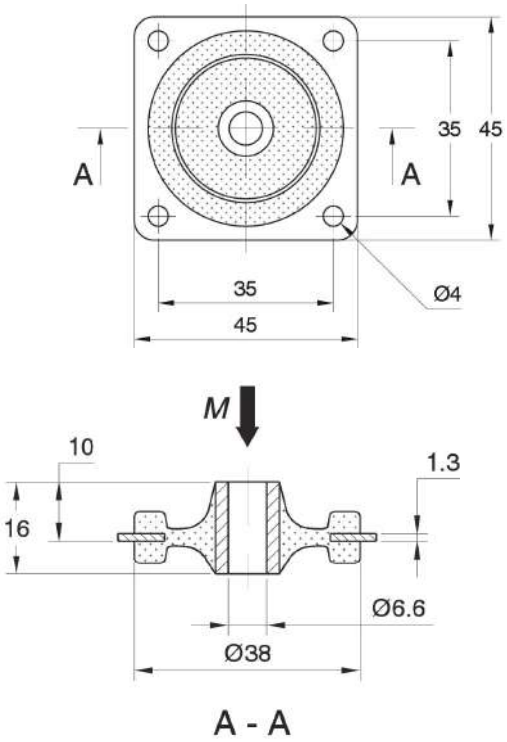

17-1801

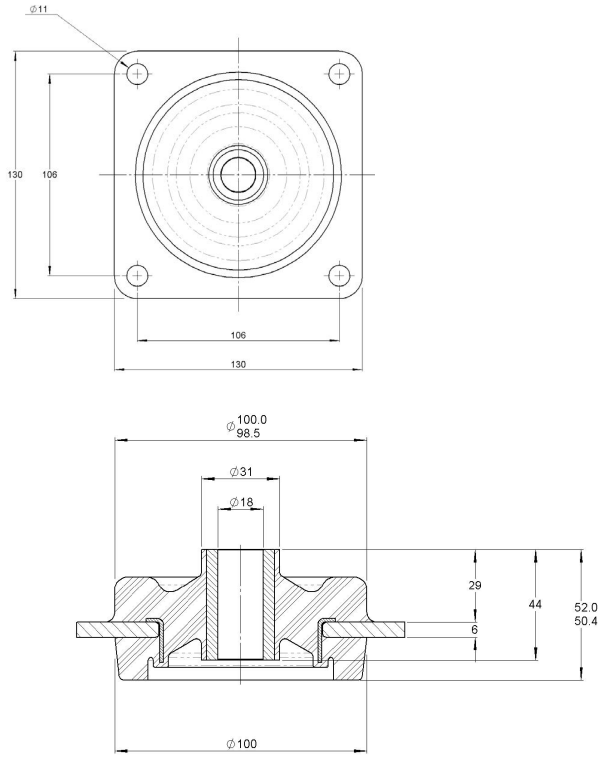

17-4573

Product Data

DRAWING NO.	PART NO.	HARDNESS (IRHD)	AXIAL		RADIAL (X)	
			STIFFNESS (N/mm)	MAX. LOAD (N)	STIFFNESS (N/mm)	MAX. LOAD (N)
17-1801	10-00583	45	11	27	34	81
	10-00584	60	21	54	67	162
17-4573	10-04819	45	95	750	-	-
	10-04820	60	190	1500	-	-

Instrument Mount

Instrument mounts are utilised for vibration insulation of electronic components, measuring devices and precise mechanical apparatuses and for instrument panels or control panels in industrial applications. A common requirement of these mounts is that they keep vibrations or shock loads introduced via the anchorages away from the instrument or device. The mounts help to protect sensitive instruments from external shock loads in mobile and non mobile use.

Typical applications:

- Small fan sets
- Transformers
- Sensitive equipment

Technical Drawing

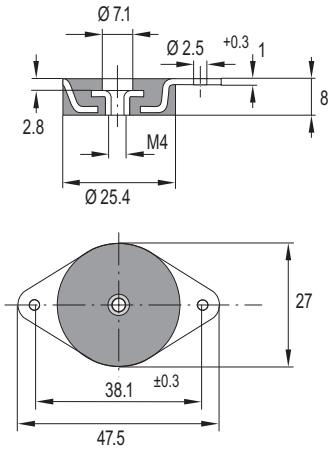

039 18 022
PLATE FIXED INSTRUMENT MOUNT

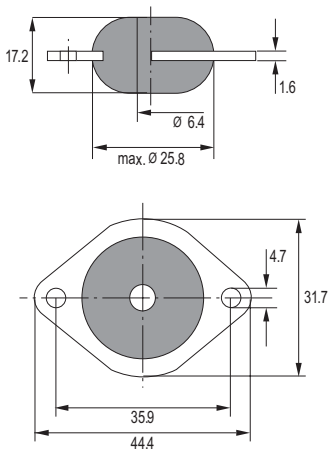

039 18 023
PLATE FIXED INSTRUMENT MOUNT

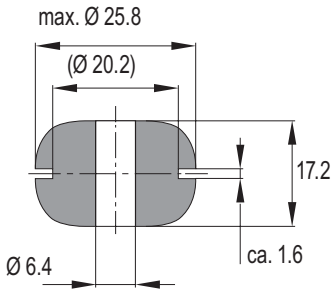

039 18 023
GROMMET STYLE INSTRUMENT MOUNT

Product Data

DRAWING NO.	PART NO.	HARDNESS (IRHD)	AXIAL		RADIAL	
			STIFFNESS (N/mm)	MAX. LOAD (N)	STIFFNESS (N/mm)	MAX. LOAD (N)
PLATE FIXED INSTRUMENT MOUNT						
039 18 022	93657	40	215	120	250	150
039 18 023	93658	40	40	80	24	70
	93659	50	65	120	40	100
	93660	65	130	260	70	200
GROMMET STYLE INSTRUMENT MOUNT						
039 18 751	49039880	40	40	80	20	45
	49039881	50	65	130	40	75
	49039902	65	130	260	70	130

Product images are graphical representations. Actual items may differ in appearance

Level Mount TF

The Level Mount is installed in minutes by following the instructions provided. There is no need to fix the machine to the floor since the rubber base of the mounting keeps the machines in place. Whenever necessary, the machine can be easily re-positioned. The level is adjusted with load applied.

The rubber element of the level mount is oil and chemical resistant. All metal parts are zinc-plated and chromated for protection against corrosion.

Models TF 250, TF 600 and TF 1200 are also available in S/S (ISO 2604/11, BS 3605:1).

The mount, with level adjuster, is suitable for a wide range of free standing workshop machines.

Typical applications:

- Lathes and Milling machines
- Grinding machines
- Presses
- Plate shears
- Nibbling machines
- Punches and cutters

TFE

Technical Drawing

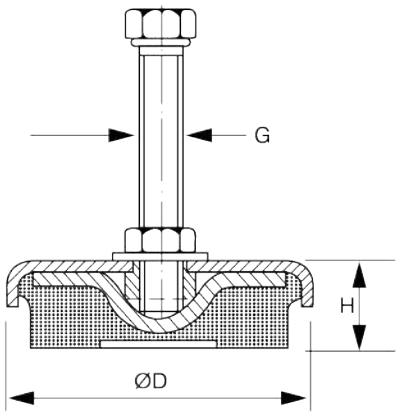

TF

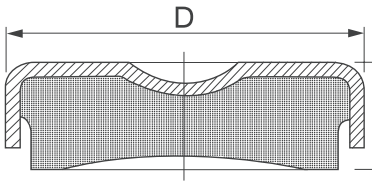

TFE

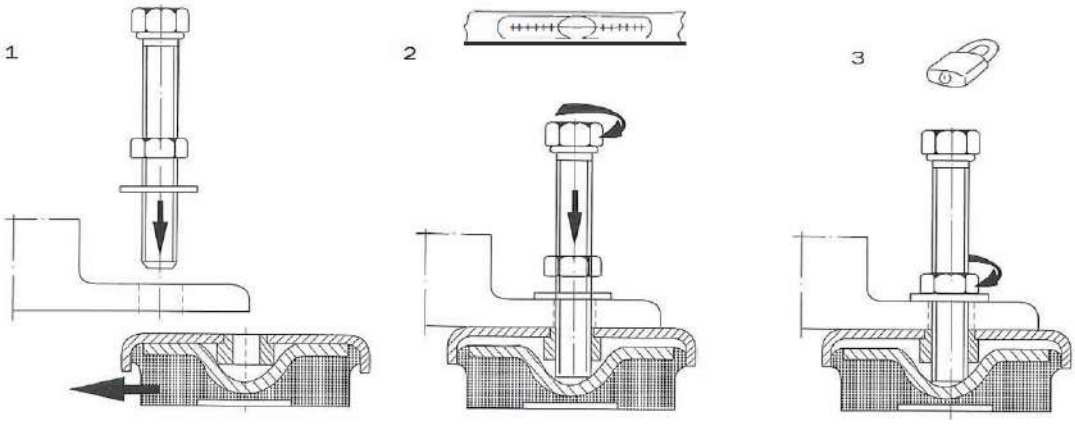

INSTALLATION INSTRUCTIONS

Product Data

REFERENCE	DRAWING NO.	PART NO.	DIMENSIONS (mm)			OVERALL BOLT LENGTH (mm)	MAX. LOAD (KN)
			ØD	H	G		
TF MOUNT							
TF 250	19-0588	20-00623	69	23	M12	100	2,5
M80	050 18 023	96504	80	30	M12	80	1,2
		96505					2
		96506					3
		96507					3,5
M120	050 18 020	96496	120	37	M12	100	5
		96497					6
		96498					8
TF 600	19-0583	20-00624	81	25	M12	100	6
TF 1200	19-0577	20-00625	108	29	M16	100	12
M160	050 18 021	96499	160	41	M16	120	9,2
		96500					13,5
		96501					18
M160	050 18 704	49039496	160	41	M16	140	9,2
		49039497					13,5
		49014539					18
M185	050 18 022	96502	185	48	M20	160	26
		96503					55
TF 3000	19-0591	20-00626	151	35	M20	120	30
TF 4000	19-0596	20-00627	170	39	M20	120	40
TF 6000	19-0598	20-00628	205	44	M24	150	60

REFERENCE	DRAWING NO.	PART NO.	DIMENSIONS (mm)		MAX. LOAD (KN)
			ØD	H	
TFE MOUNT					
TFE 601	19-0571	20-00629	80	25	8.0

Product images are graphical representations. Actual items may differ in appearance

Low Frequency

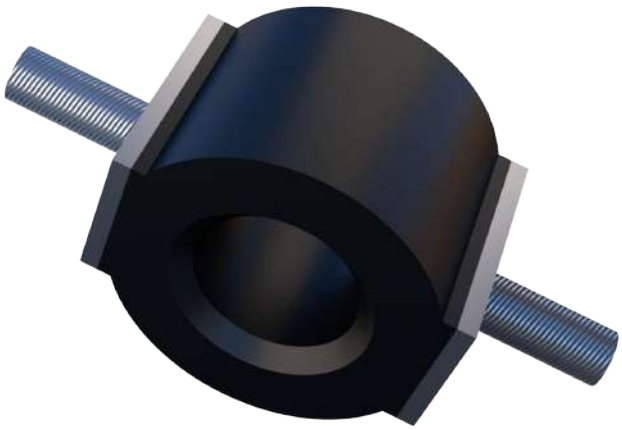

The Low Frequency mounts are designed for shear as well as compressive loads. Continual tensile load should be avoided.

These antivibration mounts are designed to give large deflection for small loads and are used to protect suspended equipment against vibration and impact.

Typical applications:

- Light instruments
- Light fans and compressors
- Computer and electronic units
- Shock mounting for light applications

Technical Drawing

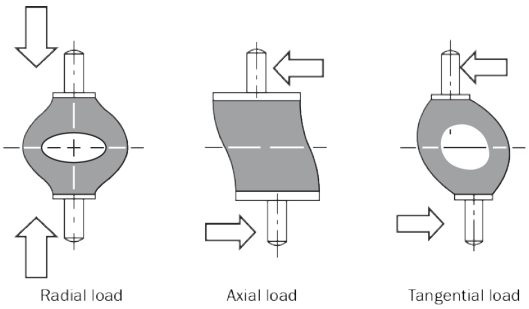

DIRECTIONAL LOADING

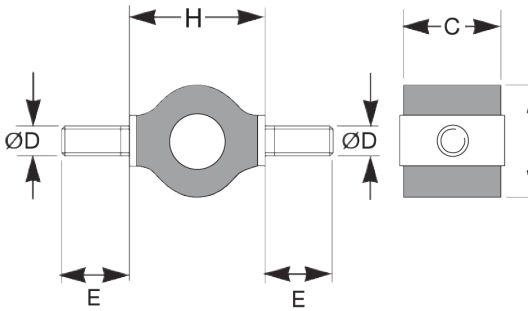

Product Data

DRAWING NO.	PART NO.	HARDNESS (IRHD)	DIMENSIONS (mm)					MAX. LOAD (N)			MAX. TORQUE (Nm)
			H	B	C	ØD	E	COMPRESSION	SHEAR	ROLLING SHEAR	
LOW FREQUENCY MOUNT (O-SHAPED)											
17-1394	20-00018	60	17	14	13	M4	10	18	5	4	1,6
055 18 001	96740	40	18	14	15	M4	7	20	10	5	1,3
	96741	50						25	12	6	
	96761	65						60	28	15	
17-1395	20-00020	45	30	25	19	M5	14	31	10	8	3,2
	20-00021	60						56	15	12	
055 18 002	96757	40	30	25	22	M5	10	32	20	13	2,7
	96755	50						40	25	17	
	96742	65						110	70	35	
17-1396	20-00022	45	38	35	25	M6	15	87	31	25	8,3
	20-00023	60						127	46	36	
055 18 003	96743	45	38	36	28	M6	9,5	95	50	27	4,7
	96750	65						215	110	55	
055 18 700	500640	65	38	36	28	M6	15	215	110	55	4,7

M Mount

The M-Mount is ideal for applications involving isolation of low frequency vibration on all planes. Also suitable for shock attenuation due to the designed ability to offer large deflections. Provides passive vibration isolation on electronic instruments, measuring equipment and test cells. The M mount is specifically designed to give large deflection at low loads. Although the mount design allows high deflection, the mountings are compact in weight and easy to install.

Advantages:

- Tight Tolerance on dynamic stiffness rates for accurate vibration calculations
- Wide load rating options, 3.5-2500 kg
- Corrosion protected to cope with arduous environments on land or marine applications (ISO 2081)

Technical Drawing

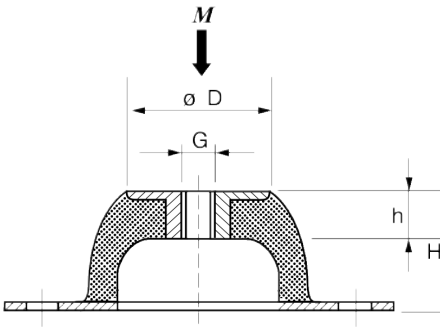

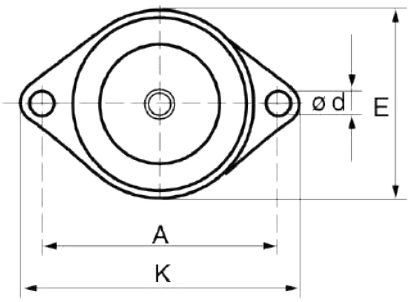

M7, M25, M50, M100, M200

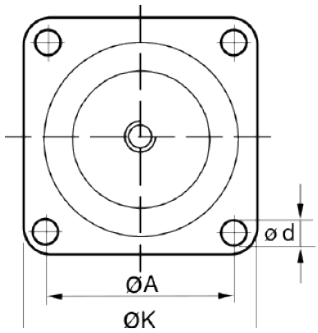

M400, M600, M1500

Product Data

REFERENCE	DRAWING NO.	PART NO.	HARDNESS (IRHD)	DIMENSIONS (mm)								MAX. LOAD (N)	MAX. BOLT TORQUE (Nm)
				ØD	E	A	K	H	h	Ød	G		
M 7	17-4056	10-00139	40	18	43	50	64	20	7	7	M6	35	7
M 7	17-4057	10-00140	60	18	43	50	64	20	7	7	M6	90	7
M 25	17-4047	10-00094	40	33	56	66	85	25	11	8	M8	200	15
M 25	17-4048	10-00095	60	33	56	66	85	25	11	8	M8	500	15
M 50	17-4052	10-00096	40	45	76	92	114	35	14	10	M10	400	20
M 50	17-4053	10-00097	60	45	76	92	114	35	14	10	M10	800	20
M 100	17-4041	10-00100	40	53	96	110	136	40	15	11,5	M10	700	20
M 100	17-4042	10-00099	60	53	96	110	136	40	15	11,5	M10	1500	20
M 200	17-4044	10-00102	40	58	101	124	151	45	13	11,5	M10	1300	20
M 200	17-4045	10-00103	60	58	101	124	151	45	13	11,5	M10	2200	20
M 400	17-4050	10-00104	40	78	-	120	150	63	18	14,5	M12	2800	25
M 400	17-4051	10-00105	60	78	-	120	150	63	18	14,5	M12	5000	25
M 600	17-4054	10-00080	40	100	-	160	200	85	25	14,5	M16	3800	50
M 600	17-4055	10-00081	60	100	-	160	200	85	25	14,5	M16	7500	50
M 1500	17-4043	10-00082	40	186	-	250	310	160	43	18	M24	14000	200
M 1500	17-4049	10-00083	60	186	-	250	310	160	43	18	M24	25000	200

Product images are graphical representations. Actual items may differ in appearance

MCR Mount

MCR Mount are designed for mobile applications where the disturbing frequencies are high and restricted movement is needed. The MCR mount is an easy to install single part mount that can be used to take up small bracket and chassis misalignments, it provides isolation of high frequency vibration and offers shock protection of vehicle mounted equipment.

Typical applications:

- Exhaust system
- Radiator mounting
- Ancillary pumps

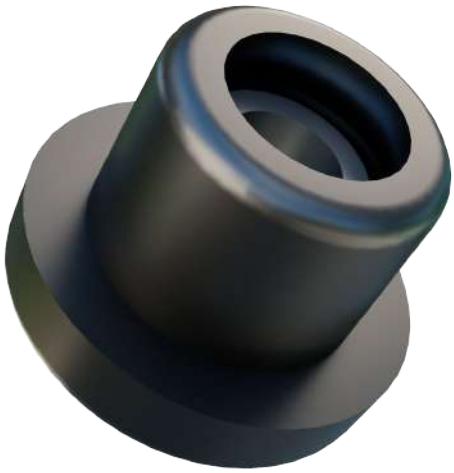

Technical Drawing

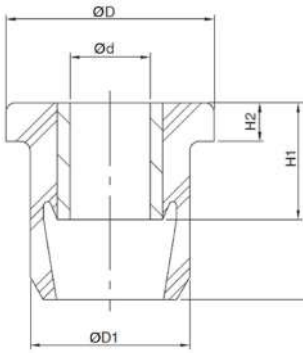

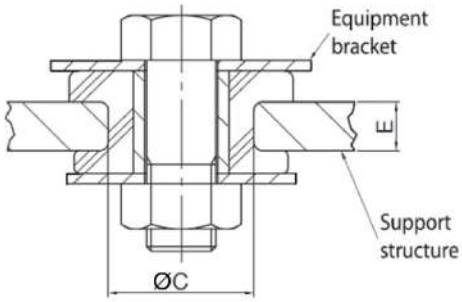

Product Data

REFERENCE	DRAWING NO.	PART NO.	HARDNESS (IRHD)	DIMENSIONS (mm)									MAX. LOAD (Kg)	BOLT SIZE	MAX. BOLT TORQUE (Nm)	WASHER PART NO.
				ØD	Ød	$ØD_1$	H	H_1	H_2	E	ØC	R				
MCR 27-1908	19-0266	20-00832	40	27,5	10	20	25,5	15,5	5	8	19	1,5	350	M10	30	20-00531
		20-01129	45										400			
		20-00831	60										550			
MCR 45-2810	11-1196	20-00782	45	45	13	31,5	32	25	10	10	28,5	1,5	800	M12	50	20-00416
		20-01137	60										1500			
MCR 51-3216	13-4285	20-01133	45	51,8	13,5	34	41	35	13,5	16	31,8	1,5	800	M12	50	20-00536
		20-01134	60										1800			
MCR 64-3820	19-0277	20-00833	45	64	16	41	50	43	16	20	38	3	1900	M16	135	20-01495
		20-01130	60										3800			
MCR 75-4624	19-0292	20-01135	45	75	16	50	56	50	21	23,5	46	3	2000	M16	135	20-00532
		20-01136	60										4000			
MCR 95-5119	11-1018	20-01131	45	95	21	57	63	51	25	19,1	50,8	3	3200	M20	135	20-00533
		20-01132	60										6250			

MDS Mount

The MDS Mount is easy to install based on a 2 part single bolt installation. There is no requirement for radius or chamfered installation hole and a steel flange prevents rubber wear at the bracket interface. The bonded steel snubbing cup limits vertical movements and prevents excessive strain in rubber. The cup is encapsulated in rubber to prevent corrosion.

The MDS Mount is designed to take high dynamic shock loads but to limit mount movements in all directions, MDS= Multi Directional Snubbing. In the static working load range, the MDS mounts have linear stiffness characteristics allowing easy prediction of mount deflection and isolation performance.

Typical applications:

- Engines
- Small cabs on Off-Highway vehicles

Technical Drawing

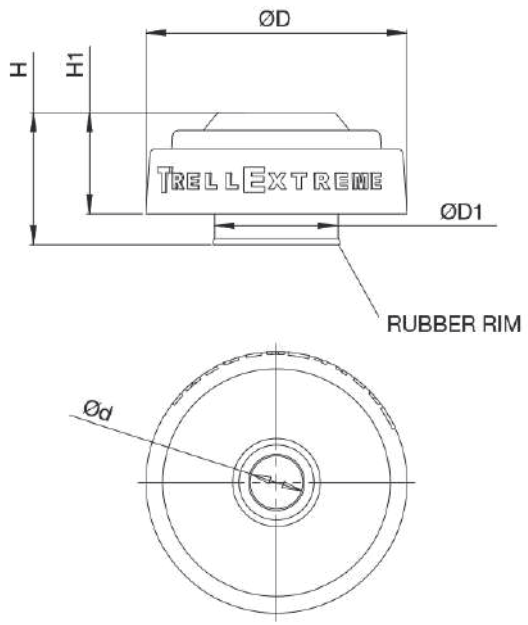

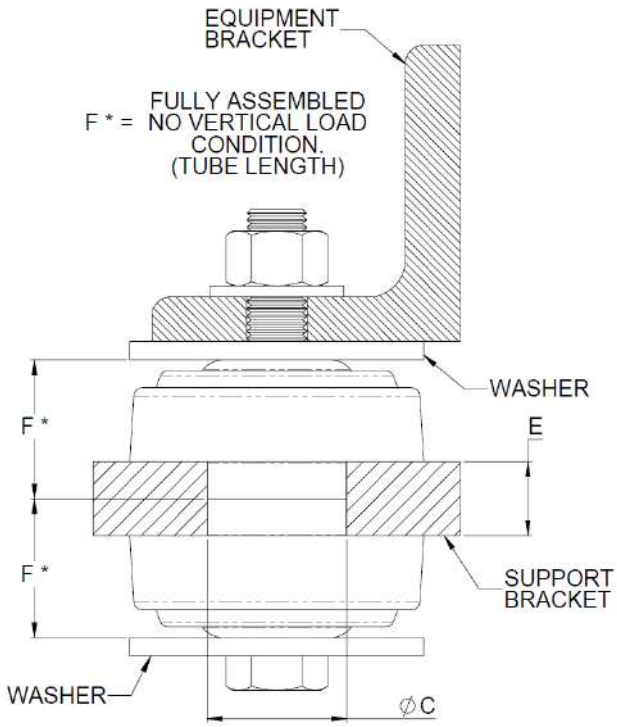

SECTION VIEW

Product Data

REFERENCE	DRAWING NO.	PART NO.	HARDNESS (IRHD)	DIMENSIONS (mm)								MAX LOAD (N)	AXIAL STIFFNESS (N/mm)	BOLT SIZE	BOLT TORQUE (Nm)
				Ød	ØD	$ØD_1$	H	H_1	C	E (+/- 0.5mm)	F *				
MDS 55	17-4967	10-02182	40	13	55,5	29,8	29	22	29.7-30.0	14.7-15.3	26,5	350	165	M12	125
		10-02183	45									400	186		
		10-04797	55									650	300		
		10-04817	65									950	450		
MDS 66	17-2280	10-01802	45	18,8	66	39,8	39	29,5	40.0-40.3	19,5	35	700	320	M16	240
		10-01803	55									1200	540		
		10-01804	65									1700	800		
MDS 80	17-2243	10-01799	45	16,2	80	37,8	41,5	32	37.9-38.2	19,5	37,5	900	350	M16	240
		10-04778	50									1150	450		
		10-01800	55									1400	550		
		10-01801	65									2000	800		
MDS85	17-2241	10-03705	45	16,2	88	41,8	40	32	42.0-42.3	16	35	900	400	M16	240
		10-02176	55									1400	700		
		10-04818	65									2000	1065		
MDS95	17-4474	10-04816	45	16,2	98	46,6	40	32	47.5-48.3	16	35	1900	580	M16	333
		10-02256	55									2400	745		
		10-02255	65									3700	1135		
		10-02259	70									4500	1365		
MDS 110	17-2285	10-03853	45	22,5	110	56,9	51,5	39	57.2-57.5	25	46,5	2300	724	M20/M22	502/685
		10-03854	55									3600	976		
		10-03855	65									5100	1382		
		10-04094	75									7650	2000		
MDS 130	17-4196	10-01984	45	30,2	128	69,2	58	43	70.75-71.25	40	57	2300	700	M30	750
		10-01985	55									5000	1160		
		10-01986	65									6000	1600		
		10-04613	70									7350	1830		

Metacone

The metacone product range is designed for high load capacity with relatively large static deflections. The high loading for a given size is achieved by utilizing the rubber to best advantage in shear and compression. Typically the mountings are assembled with overload and rebound washers to control and limit movement of the suspended equipment under shock loads. Centre fixing bolts should be torque tightened to the recommended values.

Their compact fail-safe design is available for a wide range of loadings, with in some cases, alternative fixings. Cut-outs in rubber sections on various sizes provide different vertical/horizontal stiffness ratio.

Typical applications:

- Off-highway and road vehicle engines
- Vehicle cabs
- Oil tanks/ tankers

Technical Drawing

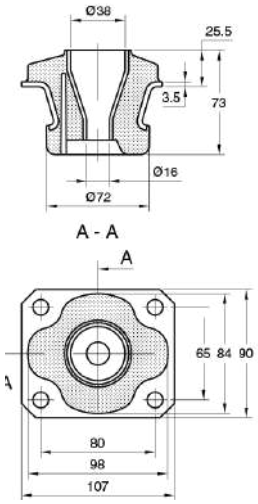

11-1009

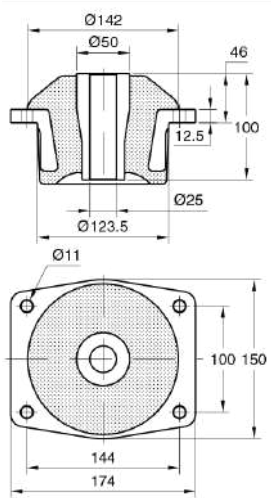

17-1550

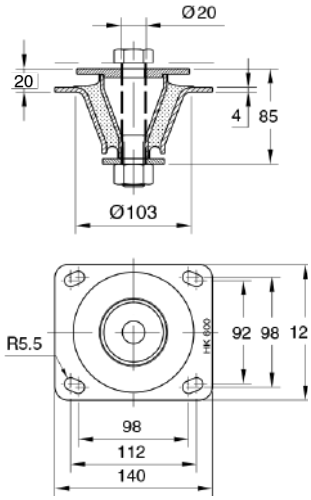

HK 600

Product Data

DRAWING NO.	PART NO.	HARDNESS (IRHD)	AXIAL (Z)		RADIAL (X)		RADIAL (Y)		BOLT SIZE	MAX. BOLT TORQUE (Nm)	TOP WASHER PART NO.	BOTTOM WASHER PART NO.	WEIGHT (Kg)
			STIFFNESS (N/mm)	MAX. LOAD (N)	STIFFNESS (N/mm)	MAX. LOAD (N)	STIFFNESS (N/mm)	MAX. LOAD (N)					
11-1009	10-00192	45	196	1400	192	300	520	8500	M16	75	20-00532	20-00532	0,59
	10-00193	55	300	2000	295	450	875	14500					0,59
17-1550	10-02605	45	588	7200	1400	3150	1400	31500	M24	260	20-00534	20-00534	4,4
	10-02271	60	995	12500	2630	5900	2630	59000					4,4
17-4040	10-00190	HK 600-40	1500	6850	2750	3050	2750	30500	M20	160	20-00643	20-00644	1
	10-00191	HK 600-60	2650	12600	4700	5250	4700	52500					1
	10-00064	HK 600-70	3900	18500	6900	7750	6900	77500					1

Metacone

The metacone product range is designed for high load capacity with relatively large static deflections. The high loading for a given size is achieved by utilizing the rubber to best advantage in shear and compression. Typically the mountings are assembled with overload and rebound washers to control and limit movement of the suspended equipment under shock loads. Centre fixing bolts should be torque tightened to the recommended values.

Their compact fail-safe design is available for a wide range of loadings, with in some cases, alternative fixings. Cut-outs in rubber sections on various sizes provide different vertical/horizontal stiffness ratio.

Typical applications:

- Off-highway and road vehicle engines
- Vehicle cabs
- Oil tanks/ tankers

Technical Drawing

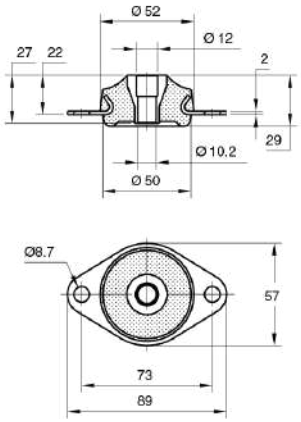

17-0379

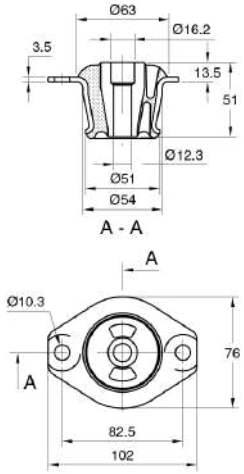

17-1691

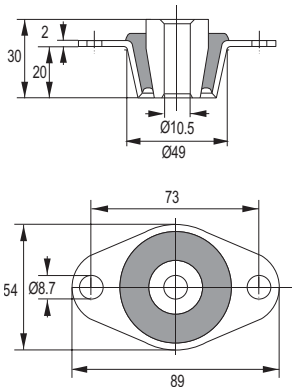

057 18 001

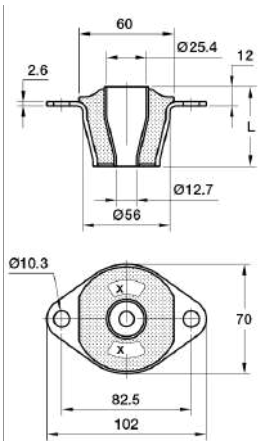

17-0248 (solid)
17-0241 (x cut out)
17-0189 (solid)

Product Data

DRAWING NO.	PART NO.	HARDNESS (IRHD)	AXIAL (Z)		RADIAL (X)		RADIAL (Y)		BOLT SIZE	MAX. BOLT TORQUE (Nm)	TOP WASHER PART NO.	BOTTOM WASHER PART NO.	WEIGHT (Kg)
			STIFFNESS (N/mm)	MAX. LOAD (N)	STIFFNESS (N/mm)	MAX. LOAD (N)	STIFFNESS (N/mm)	MAX. LOAD (N)					
17-0379	10-00402	45	97	350	300	320	300	320	M10	25	20-00531	20-00531	0,12
	10-00404	60	190	700	520	650	520	650					
17-1691	10-00566	45	215	720	626	600	1400	1300	M12	90	20-00535	20-00536	0,44
	10-00567	60	450	1440	1252	1150	2800	2600					
057 18 001	90905	50	160	550	1000	1000	1000	1000	M10	25	49056605	49056605	0,14
	90810	65	380	1300	1800	1800	1800	1800					
	91056	75	580	2000	2200	2200	2200	2200					
17-0241	10-00374	45	166	620	460	500	920	950	M12	40	20-00529	10-03666	0,18
	10-00375	60	333	1220	920	950	1840	1900					
17-0248	10-00379	45	250	950	1600	1950	1600	1950	M12	40	20-00529	10-03666	0,19
	10-00380	60	500	1900	3250	4000	3250	4000					
17-0189	10-00365	45	428	1450	1205	1250	1205	1250	M12	40	20-00529	10-03666	0,28
	10-00367	70	1180	4000	3550	3600	3550	3600					
17-4039	10-01119	HK 60-40	200	900	520	900	520	900	M12	40	20-01103	20-00416	0,24
	10-01122	HK 60-50	256	1150	760	1150	760	1150					
	10-01120	HK 60-60	405	1800	1200	1800	1200	1800					
	10-01121	HK 60-70	560	2500	1760	2500	1760	2500					

Technical Drawing

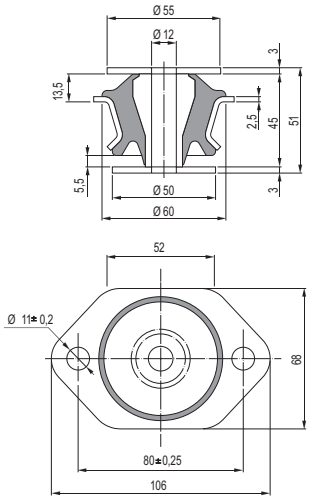

057 18 816

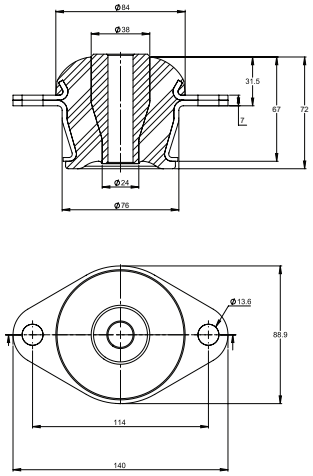

17-1032

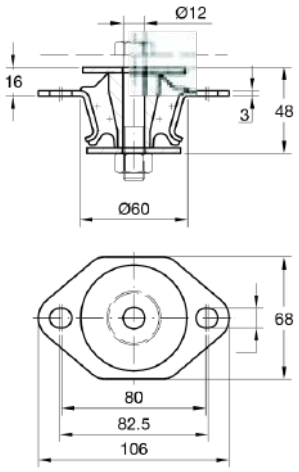

HK 60

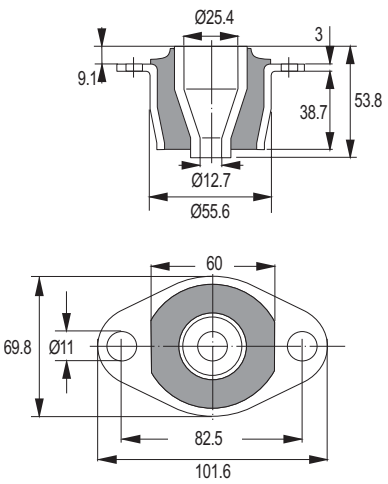

057 18 226

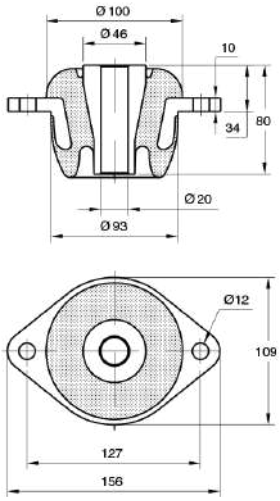

17-1843

Product Data

DRAWING NO.	PART NO.	HARDNESS (IRHD)	AXIAL (Z)		RADIAL (X)		RADIAL (Y)		BOLT SIZE	MAX. BOLT TORQUE (Nm)	TOP WASHER PART NO.	BOTTOM WASHER PART NO.	WEIGHT (kg)
			STIFFNESS (N/mm)	MAX. LOAD (N)	STIFFNESS (N/mm)	MAX. LOAD (N)	STIFFNESS (N/mm)	MAX. LOAD (N)					
057 18 226	93947	50	480	2300	2100	1200	2100	1200	M12	40	97138	93950 / 93127	0,31
	93948	65	990	5000	4200	2000	4200	2000					
	93949	75	1400	6000	12000	9000	12000	9000					
057 18 816	49047034	50	240	700	640	1000	640	1000	M12	65	included	included	0,4
	49047035	65	460	1400	1200	1800	1200	1800					
	49047036	75	720	2200	1800	2700	1800	2700					
17-1032	10-02905	45	492	2500	490	750	975	750	M16	135	20-00532	20-00532	1
	10-02977	60	860	4700	975	1500	1950	1500					
17-1843	20-02529	45	520	3200	870	1400	870	1400	M20	160	20-00533	20-00533	1,7
	10-03505	50	660	3800	1100	1800	1100	1800					
	10-00610	60	1060	6000	2800	4500	2800	4500					

Metacone

The metacone product range is designed for high load capacity with relatively large static deflections. The high loading for a given size is achieved by utilizing the rubber to best advantage in shear and compression. Typically the mountings are assembled with overload and rebound washers to control and limit movement of the suspended equipment under shock loads. Centre fixing bolts should be torque tightened to the recommended values.

Their compact fail-safe design is available for a wide range of loadings, with in some cases, alternative fixings. Cut-outs in rubber sections on various sizes provide different vertical/horizontal stiffness ratio.

Typical applications:

- Off-highway and road vehicle engines
- Vehicle cabs
- Oil tanks/ tankers

Technical Drawing

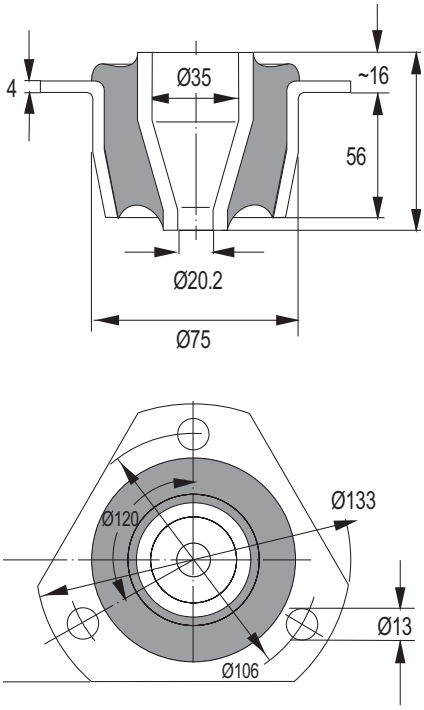

057 18 013

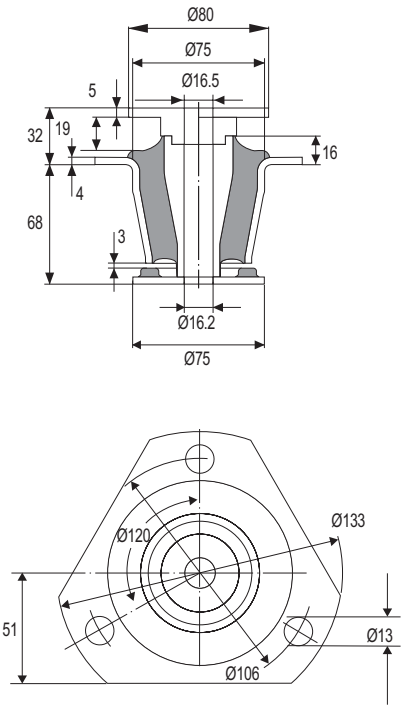

057 18 756

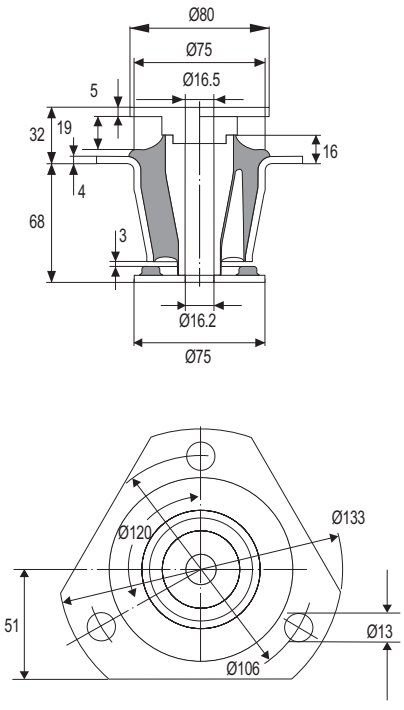

057 18 757

Product images are graphical representations. Actual items may differ in appearance

Product Data

DRAWING NO.	PART NO.	HARDNESS (IRHD)	AXIAL (Z)		RADIAL (X)		RADIAL (Y)		BOLT SIZE	MAX. BOLT TORQUE (Nm)	TOP WASHER PART NO.	BOTTOM WASHER PART NO.	WEIGHT (kg)
			STIFFNESS (N/mm)	MAX. LOAD (N)	STIFFNESS (N/mm)	MAX. LOAD (N)	STIFFNESS (N/mm)	MAX. LOAD (N)					
057 18 013	90697	50	670	3700	6700	13400	6700	13400	M20	220	97141	511081 / 90819 / 90831	0,99
	90877	65	1500	8700	10000	19500	9300	19500					
	90849	75	2400	13700	24000	48000	24000	48000					
057 18 756	511906	50	600	4000	1800	5500	1800	5500	M16	200	511927	511928	0,96
	2129306	60	860	7000	3200	9500	3200	9500					
	2129307	65	1510	8000	3800	11500	3800	11500					
	2129308	70	1650	10000	4500	13500	4500	13500					
	2129309	75	1900	12000	5200	15500	5200	15500					
057 18 757	2129310	50	550	4400	2900	8800	1600	4800	M16	200	511927	511928	0,95
	2129311	60	730	6000	3600	10800	2300	6800					
	2129312	65	1150	8500	4300	12800	3000	8800					
	2129313	70	1450	11600	5000	14800	3600	10800					
	2129314	75	1800	14400	5600	16800	4300	12800					

Metacone

The metacone product range is designed for high load capacity with relatively large static deflections. The high loading for a given size is achieved by utilizing the rubber to best advantage in shear and compression. Typically the mountings are assembled with overload and rebound washers to control and limit movement of the suspended equipment under shock loads. Centre fixing bolts should be torque tightened to the recommended values. Their compact fail-safe design is available for a wide range of loadings, with in some cases, alternative fixings. Cut-outs in rubber sections on various sizes provide different vertical/horizontal stiffness ratio.

Typical applications:

- Off-highway and road vehicle engines
- Vehicle cabs
- Oil tanks/ tankers

Technical Drawing

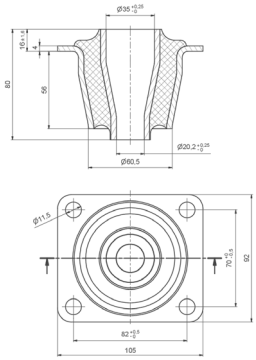

057 18 143

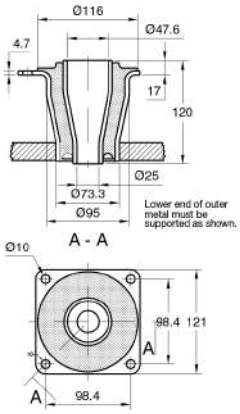

17-0146

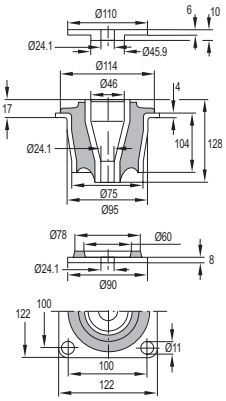

057 18 019

Product Data

DRAWING NO.	PART NO.	HARDNESS (IRHD)	AXIAL (Z)		RADIAL (X)		RADIAL (Y)		BOLT SIZE	MAX. BOLT TORQUE (Nm)	TOP WASHER PART NO.	BOTTOM WASHER PART NO.	WEIGHT (kg)
			STIFFNESS (N/mm)	MAX. LOAD (N)	STIFFNESS (N/mm)	MAX. LOAD (N)	STIFFNESS (N/mm)	MAX. LOAD (N)					
057 18 143	92792	50	600	3500	3000	7400	3000	7400	M20	220	97141	90819 / 90831	1,11
	92793	65	1220	7200	4800	12000	4800	12000					
17-0146	10-00360	45	1400	9500	5900	8400	5900	8400	M24	200	20-00527	10-03862	2
	10-00361	60	2860	17000	11800	16800	11800	16800					
057 18 019	49014538	45 (D)	1300	8500	6500	4300	6500	4300	M24	535	97142	90501	2,15
	91430	50 (C)	1500	10300	6400	9600	6400	9600					
	90867	55 (B)	2100	13400	10500	7000	10500	7000					
	60034212	60 (A)	2300	14700	11500	7700	11500	7700					
	90491	65 (E)	3400	23000	17000	11300	17000	11300					
	91009	75 (F)	4200	30900	21000	14000	21000	14000					
	92346	80 (G)	5800	48000	29000	19300	29000	19300					

Product images are graphical representations. Actual items may differ in appearance

Metacone

The metacone product range is designed for high load capacity with relatively large static deflections. Their compact fail-safe design is available for a wide range of loadings, with in some cases, alternative fixings. Cut-outs in rubber sections on various sizes provide different vertical/horizontal stiffness ratio.

Technical Drawing

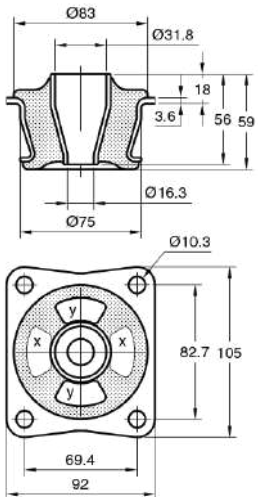

17-0277 (x cut out)
17-0311 (y cut out)
17-0341 (solid)

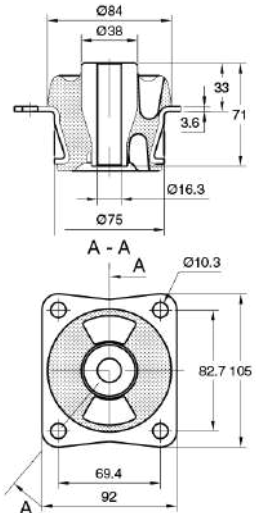

17-1865

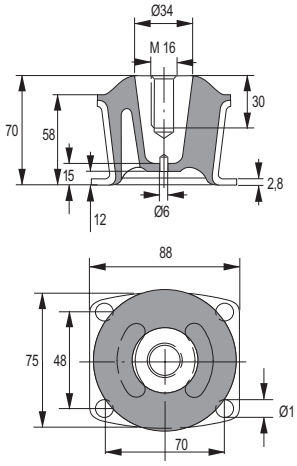

057 18 065

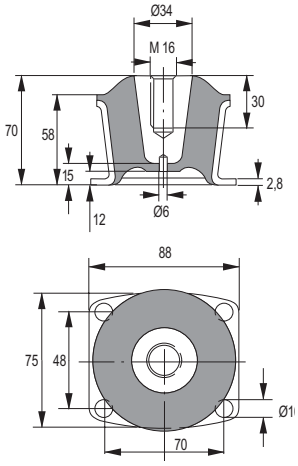

057 18 123

Product Data

DRAWING NO.	PART NO.	HARDNESS (IRHD)	AXIAL (Z)		RADIAL (X)		RADIAL (Y)		BOLT SIZE	MAX. BOLT TORQUE (Nm)	TOP WASHER PART NO.	BOTTOM WASHER PART NO.	WEIGHT (kg)
			STIFFNESS (N/mm)	MAX. LOAD (N)	STIFFNESS (N/mm)	MAX. LOAD (N)	STIFFNESS (N/mm)	MAX. LOAD (N)					
17-0277	10-00385	45	207	1250	620	950	410	650	M16	75	20-00773	20-00532	0,56
	10-00387	60	378	2300	1470	2250	740	1150					
17-0311	10-00391	45	207	1250	325	550	655	1050	M16	75	20-00773	20-00532	0,58
	10-00392	60	378	2200	650	1050	1310	2150					
17-1865	10-00615	55	300	1800	1200	1850	600	900	M16	135	20-00532	20-00532	0,86
17-0341	10-00394	45	266	1600	866	1400	866	1400	M16	75	20-00773	20-00532	0,54
	10-00395	60	540	3000	1732	2800	1732	2800					
	10-00396	70	758	4300	2300	3750	2300	3750					
057 18 065	90822	50	240	1700	650	1000	330	500	M16	63	49032678	-	0,68
	92448	75	880	6000	1750	2600	1100	1700					
057 18 123	93270	50	520	3500	1000	1500	1000	1500	M16	63	49032678	-	0,7
	91790	70	1100	6000	1700	2600	1700	2600					
057 18 228	93641	40	210	1600	440	650	180	300	M16	126	49032678	49026836	0,86
	93642	50	400	3100	890	1350	360	550					
	91405	70	600	6500	600	2400	700	1050					

DRAWING NO.	PART NO.	HARDNESS (IRHD)	AXIAL (Z)		RADIAL (X)		RADIAL (Y)		BOLT SIZE	MAX. BOLT TORQUE (Nm)	TOP WASHER PART NO.	BOTTOM WASHER PART NO.	WEIGHT (kg)
			STIFFNESS (N/mm)	MAX. LOAD (N)	STIFFNESS (N/mm)	MAX. LOAD (N)	STIFFNESS (N/mm)	MAX. LOAD (N)					
057 18 075	93385	50	630	4100	800	1200	800	1200	M16	126	49032678	49026836	0,93
	91829	65	1100	8500	1400	2100	1400	2100					
	90863	75	1500	13000	2240	3360	2240	3360					

Technical Drawing

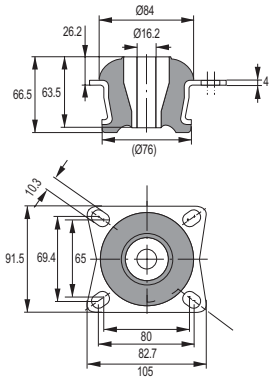

057 18 075

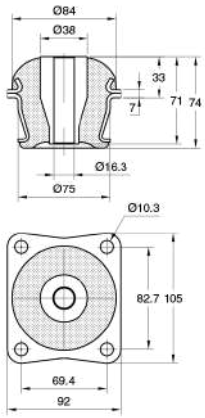

17-0391

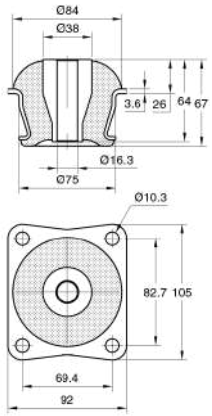

17-0566

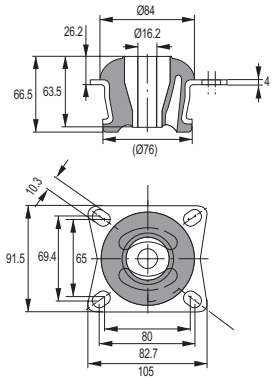

057 18 228

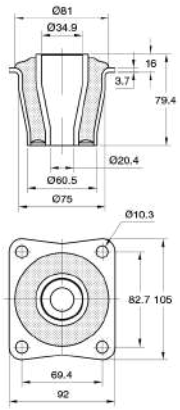

17-1227

Product Data

DRAWING NO.	PART NO.	HARDNESS (IRHD)	AXIAL (Z)		RADIAL (X)		RADIAL (Y)		BOLT SIZE	MAX. BOLT TORQUE (Nm)	TOP WASHER PART NO.	BOTTOM WASHER PART NO.	WEIGHT (kg)
			STIFFNESS (N/mm)	MAX. LOAD (N)	STIFFNESS (N/mm)	MAX. LOAD (N)	STIFFNESS (N/mm)	MAX. LOAD (N)					
17-0566	10-00433	45	389	2000	750	1250	750	1250	M16	135	20-00532	20-00532	0,82
	10-00434	60	690	3800	1500	2450	1500	2450					
	10-00435	70	905	5250	2300	3750	2300	3750					
17-0391	10-00409	35	328	1950	737	1150	737	1150	M16	135	20-00532	20-00532	1,1
	10-00411	45	492	2900	1105	1700	1105	1700					
	10-00414	60	765	5000	2185	3350	2185	3350					
	10-00415	70	1325	6100	3470	5300	3470	5300					
17-1227	10-00723	50	990	6350	7600	8500	7600	8500	M20	180	20-00528	10-03707	1,1
	10-00460	60	1562	10000	12000	13500	12000	13500					
	10-02575	70	2300	14700	17640	19700	17640	19700					

Product images are graphical representations. Actual items may differ in appearance

Metacone

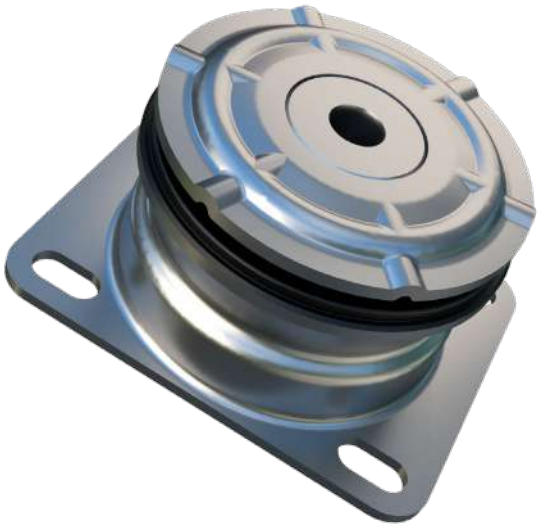

The metacone product range is designed for high load capacity with relatively large static deflections. The high loading for a given size is achieved by utilizing the rubber to best advantage in shear and compression. Typically the mountings are assembled with overload and rebound washers to control and limit movement of the suspended equipment under shock loads. Centre fixing bolts should be torque tightened to the recommended values.

Their compact fail-safe design is available for a wide range of loadings, with in some cases, alternative fixings. Cut-outs in rubber sections on various sizes provide different vertical/horizontal stiffness ratio.

Typical applications:

- Off-highway and road vehicle engines
- Vehicle cabs
- Oil tanks/ tankers

Technical Drawing

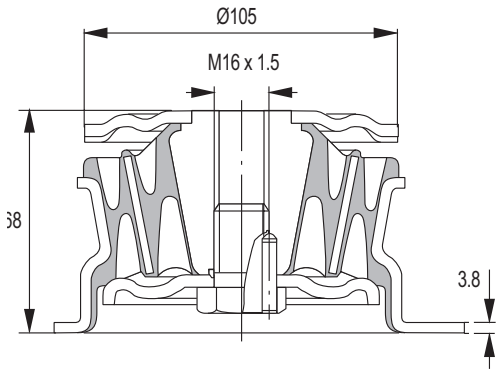

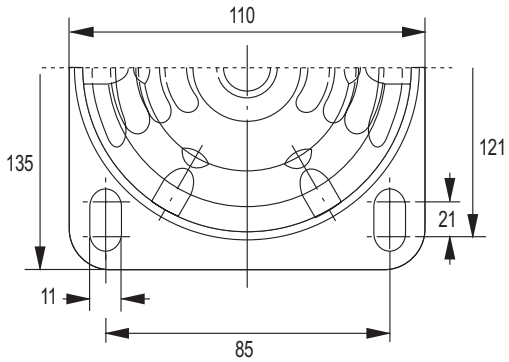

057 18 224 (VOIDS)
057 18 220 (SOLID)

Product Data

DRAWING NO.	PART NO.	HARDNESS (IRHD)	AXIAL (Z)		RADIAL (X)		RADIAL (Y)		BOLT SIZE	MAX. BOLT TORQUE (Nm)	TOP WASHER PART NO.	BOTTOM WASHER PART NO.	WEIGHT (kg)
			STIFFNESS (N/mm)	MAX. LOAD (N)	STIFFNESS (N/mm)	MAX. LOAD (N)	STIFFNESS (N/mm)	MAX. LOAD (N)					
057 18 224	91491	65	330	5530	1400	2800	700	1400	M16x1.5	230	included	-	1,84
	91381	75	560	8960	2200	4400	1100	2200					
057 18 220	91067	40	210	1100	750	1500	750	1500	M16x1.5	230	included	-	3,21
	91374	50	430	2200	1100	2200	1100	2200					
	93876	65	710	6200	1700	3400	1700	3400					
	91230	75	1050	8500	2600	5200	2600	5200					
	49018753	80	1500	10000	3900	7800	3900	7800					

Metacone

The metacone product range is designed for high load capacity with relatively large static deflections. The high loading for a given size is achieved by utilizing the rubber to best advantage in shear and compression. Typically the mountings are assembled with overload and rebound washers to control and limit movement of the suspended equipment under shock loads. Centre fixing bolts should be torque tightened to the recommended values.

Their compact fail-safe design is available for a wide range of loadings, with in some cases, alternative fixings. Cut-outs in rubber sections on various sizes provide different vertical/horizontal stiffness ratio.

Typical applications:

- Off-highway and road vehicle engines
- Vehicle cabs
- Oil tanks/ tankers

Technical Drawing

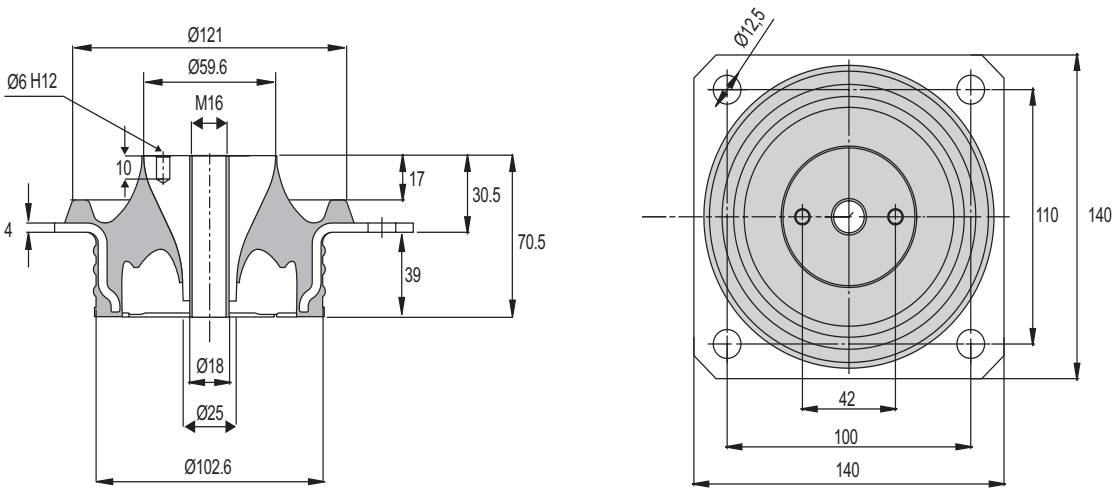

057 18 801 (SOLID)
BOLT STYLE: THROUGH

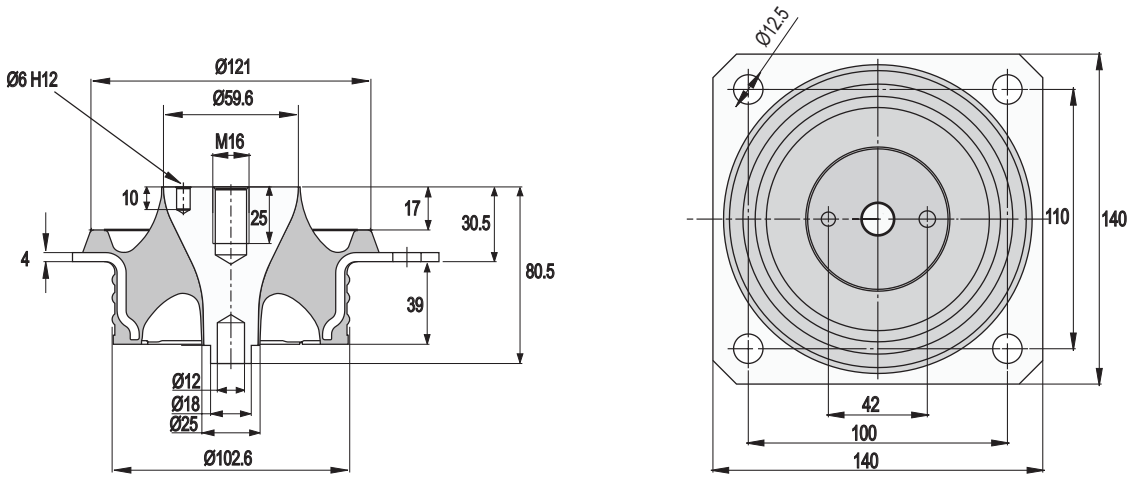

057 18 801 (SOLID)
BOLT STYLE: BLIND

Product Data

DRAWING NO.	PART NO.	HARDNESS (IRHD)	AXIAL (Z)		RADIAL (X)		RADIAL (Y)		BOLT STYLE	BOLT SIZE	MAX BOLT TORQUE (Nm)	TOP WASHER PART NO.	BOTTOM WASHER PART NO.
			STIFFNESS (N/mm)	MAX LOAD (N)	STIFFNESS (N/mm)	MAX LOAD (N)	STIFFNESS (N/mm)	MAX LOAD (N)					
057 18 801	49038287	40	200	2100	270	1400	270	1400	BLIND	M16	230	-	-
	60901350								THRO'				-
	60901357								THRO'				included
	49038288	50	240	2500	350	1800	350	1800	BLIND	M16	230	-	-
	60901351								THRO'				-
	60901358								THRO'				included
	49038289	50	320	3100	450	2300	450	2300	BLIND	M16	230	-	-
	60901352								THRO'				-
	60901359								THRO'				included
	49038290	55	340	3500	600	3000	600	3000	BLIND	M16	230	-	-
	60901353								THRO'				-
	60901360								THRO'				included
	49038291	60	450	4700	830	4200	830	4200	BLIND	M16	230	-	-
	60901354								THRO'				-
	60901361								THRO'				included
	49038302	65	520	5500	1040	5200	1040	5200	BLIND	M16	230	-	-
	60901355								THRO'				-
	60901362								THRO'				included
	60901415	70	600	6700	1100	5500	1100	5500	BLIND	M16	230	-	-
	60901356								THRO'				-
	60901363								THRO'				included
057 18 799	49038272	40	300	3000	500	2500	500	2500	BLIND	M16	230	-	-
	60901634								THRO'				-
	60900310								THRO'				included
	49038273	50	380	3700	650	3300	650	3300	BLIND	M16	230	-	-
	60901635								THRO'				-
	60901745								THRO'				included
	49038274	50	450	4600	800	4000	800	4000	BLIND	M16	230	-	-
	60901636								THRO'				-
	60901746								THRO'				included
	49038275	55	550	5600	1100	5500	1100	5500	BLIND	M16	230	-	-
	60901637								THRO'				-
	60901747								THRO'				included
	49038276	60	700	7500	1500	7500	1500	7500	BLIND	M16	230	-	-
	60901638								THRO'				-
	60901748								THRO'				included
	49038277	65	780	8300	1550	7800	1550	7800	BLIND	M16	230	-	-
	60901639								THRO'				-
	60901749								THRO'				included
	60901381	70	900	9900	1950	9800	1950	9800	BLIND	M16	230	-	-
	60901640								THRO'				-
	60900072								THRO'				included

Metacone

The metacone product range is designed for high load capacity with relatively large static deflections. The high loading for a given size is achieved by utilizing the rubber to best advantage in shear and compression. Typically the mountings are assembled with overload and rebound washers to control and limit movement of the suspended equipment under shock loads. Centre fixing bolts should be torque tightened to the recommended values.

Their compact fail-safe design is available for a wide range of loadings, with in some cases, alternative fixings. Cut-outs in rubber sections on various sizes provide different vertical/horizontal stiffness ratio.

Typical applications:

- Off-highway and road vehicle engines
- Vehicle cabs
- Oil tanks/tankers

Technical Drawing

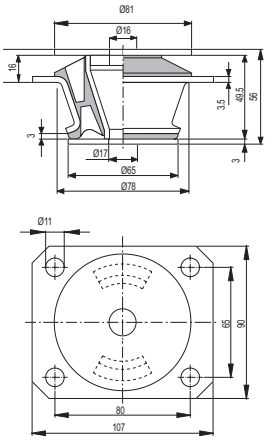

057 18 805 (VOIDS)
057 18 804 (SOLID)

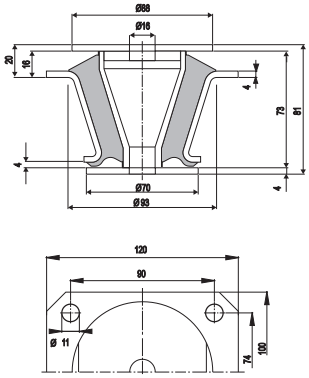

057 18 806

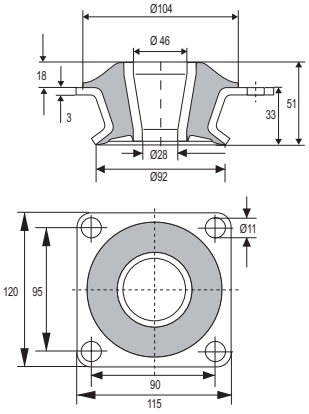

057 18 060

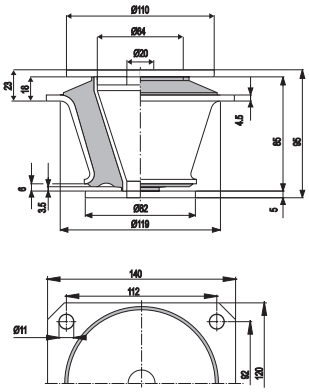

057 18 807

Product Data

DRAWING NO.	PART NO.	HARDNESS (IRHD)	AXIAL (Z)		RADIAL (X)		RADIAL (Y)		BOLT SIZE	MAX. BOLT TORQUE (Nm)	TOP WASHER PART NO.	BOTTOM WASHER PART NO.	WEIGHT (kg)
			STIFFNESS (N/mm)	MAX. LOAD (N)	STIFFNESS (N/mm)	MAX. LOAD (N)	STIFFNESS (N/mm)	MAX. LOAD (N)					
057 18 804	49041359	50	490	1400	1100	3300	1100	3300	M16	95	included	included	0,79
	49041360	65	900	2800	2200	6600	2200	6600					
	49041361	75	1300	4000	3300	8000	3300	8000					
057 18 805	49075604	40	220	900	880	2700	400	1200	M16	95	included	included	0,77
	49041362	50	290	1000	1100	3300	500	1500					
	49075605	60	520	1500	1500	4800	690	2100					
	49041363	65	540	1600	1900	6000	860	2600					
	49041364	75	950	2200	3300	8000	1200	3600					

Product images are graphical representations. Actual items may differ in appearance

DRAWING NO.	PART NO.	HARDNESS (IRHD)	AXIAL (Z)		RADIAL (X)		RADIAL (Y)		BOLT SIZE	MAX. BOLT TORQUE (Nm)	TOP WASHER PART NO.	BOTTOM WASHER PART NO.	WEIGHT (kg)
			STIFFNESS (N/mm)	MAX. LOAD (N)	STIFFNESS (N/mm)	MAX. LOAD (N)	STIFFNESS (N/mm)	MAX. LOAD (N)					
057 18 806	49041365	50	1200	2500	1265	2530	1265	2530	M16	95	included	included	1,39
	49041366	65	2100	4200	2145	4290	2145	4290					
	49041367	75	3800	7500	3780	7560	3780	7560					
057 18 060	93900	40	230	2400	560	2200	560	2200	M16	150	97140	97139	0,95
	91479	50	360	3800	870	3400	870	3400					
	90465	65	660	7000	1400	5600	1400	5600					
	476214	75	830	9000	2100	8400	2100	8400					
	90821	85	1290	14000	2000	11000	2000	11000					
057 18 807	49041368	50	1400	7000	1430	7150	1430	7150	M20	185	included	included	2,1
	49041369	65	2400	12000	2470	12350	2470	12350					
	49041370	75	3800	19000	4050	20250	4050	20250					

Metaxentric Bushes

Metaxentric bushes have a large rubber section with the central pin offset towards one radial plane. These bushes can provide a relatively large radial deflection whilst providing excellent motion control characteristics.

Features:

- Three dissimilar translational stiffnesses for the best vibration isolation and motion control.
- Load range from 138 - 464 kg
- Rising rate stiffness characteristics for overload conditions help to limit motion and transmitted acceleration.
- Robust and fail-safe, suitable for ROPS and FOPS cab structures.
- Simple to fit, the Housing lends itself to robust structures.

Metaxentric Bushes are similar to conventional UD Bushes but with inner and outer sleeves offset radially. This feature provides a greater rubber thickness and hence increased flexibility in the normal direction of loading, whilst maintaining control in other modes and still allowing torsional movement. The rubber section is relieved to eliminate harmful tensile stresses.

Typical applications:

- Vehicle spring eye mounting
- Tilt Cab pivot bush
- Engine mounting

Technical Drawing

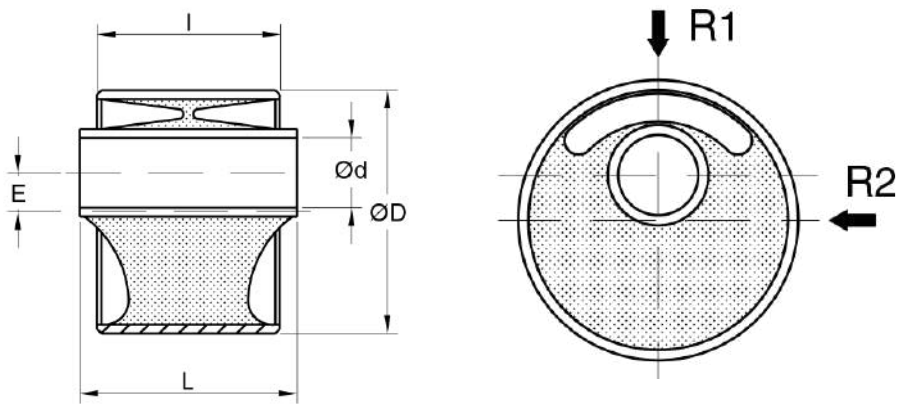

SINGLE VOID

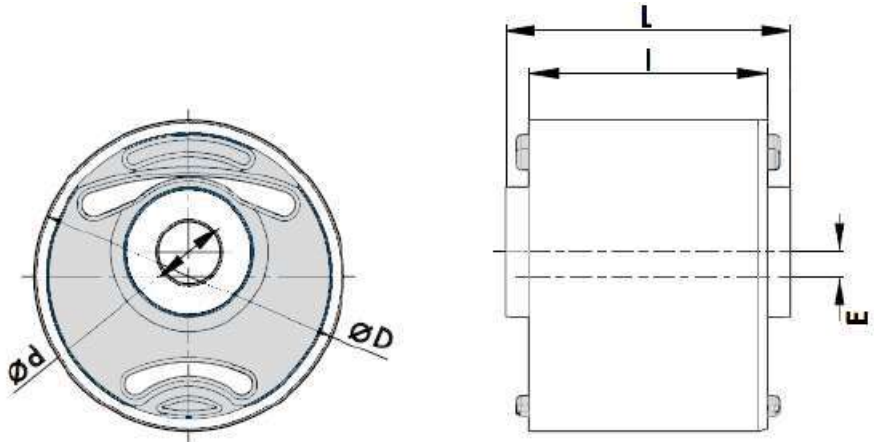

DUAL VOID

Product Data

DRAWING NO.	PART NO.	HARDNESS (IRHD)	DIMENSIONS (mm)							DIRECTION R1			DIRECTION R2	AXIAL	
			ØD	Tolerance for ØD	Ød	Tolerance for Ød	l	L	E	STIFfNESS (N/mm)	MAX. DEF. (mm)	MAX. LOAD (N)	STIFFNESS (N/mm)	STIFF. (N/mm)	MAX. DEF. (mm)
SINGLE VOID															
13-1270	10-00252	50	47,6	-0.02/+0.07	16	-0.06/+0.07	50,8	63,5	7,1	675	2	1380	1350	190	3
	10-00253	60								1040		2120	2080	290	
	10-04553	70								1200		2450	2400	340	
13-2691	10-00296	50	75,3	-0.1/+0.2	24	-0/+0.25	20,8	70	10,5	750	3,5	2680	600	380	7
	10-00297	60								1200		3250	910	610	
	10-02228	70								1760		6280	1400	890	
13-1165	10-00244	50	88,9	-0.03/+0.15	25,4	-0/+0.13	66,7	79,4	14,3	475	3,8	1840	640	250	8
	10-00245	65								900		3480	990	460	
	10-00246	70								972		3770	1200	500	
002 18 979	49061816	40	100	-0/+0.22	32	H9	70	85	7	220	5	1100	690	130	5
	49061815	50								320		1600	1100	210	
	49061777	70								600		3000	1760	330	
	49061814	75								900		4500	2340	450	
	49062249	85								1670		8350	4340	940	
13-1355	10-00262	45	101,6	-0.25/+0.25	43,7	-0.06/+0.12	63,5	72,4	9,5	682	3,5	2430	1150	220	6
13-4059	10-00264	75	101,6	-0.25/+0.25	43,7	-0.06/+0.12	63,5	72,4	9,5	2360	3,5	8400	3980	760	6
DUAL VOID															
002 18 960	49040515	35	65	+0.087/+0.207	13	–	50	60	5	130	4	490	310	70	2,5
	49040516	40								170		640	400	95	
	49040517	50								230		850	560	120	
002 18 937	49041844	40	100	-0/0.22	25	-0.2/+0.2	70	85	7	220	5	1100	690	130	5
	49026595	50								320		1600	1100	210	
	49041846	65								600		3000	1760	330	
	49041847	75								900		4500	2340	450	

RA Mount

RA mount uses the rubber profile in shear and compression to obtain good vertical flexibility with the advantage of horizontal stability. For normal speeds of approx. 1500 RPM, the RA provides a degree of isolation of 75-85%. For better isolation, the alternative RAEM or M-Series can be chosen.

Advantages:

- Rubber features are utilized effectively combining compression and shear wide load rating options, 40-2100 kg
- Corrosion protected to cope with arduous environments on land or marine applications
- Domed shape cover to protect against oil contamination
- Fitted as standard with an integral fail-safe device with resilient stop, making the RA ideal for use in mobile applications
- The RA mounts can accommodate occasional vertical shock loads up to 5G and shock loads up to 2G in other directions

Typical applications:

- Pumps
- Fans
- Converters
- Compressors
- Combustion engines
- Industrial and Marine gensets
- Generators
- Also suitable for use with presses, punches and other work shop machines

Technical Drawing

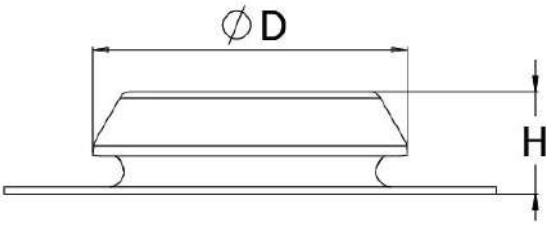

RA

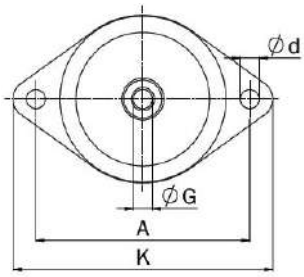

TYPE I

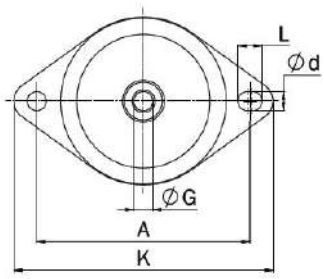

TYPE II

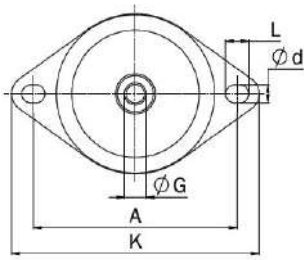

TYPE III

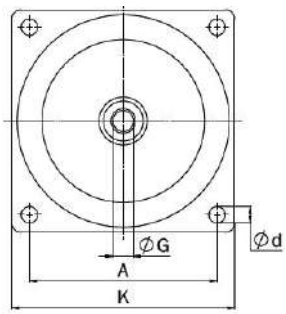

TYPE IV

Product Data

REFERENCE		DRAWING NO.	PART NO.	HARDNESS (IRHD)	DIMENSIONS (mm)							MAX. LOAD (kN)	MAX. BOLT TORQUE (Nm)
					ØD	A	K	H	Ød	L	G		
STANDARD													
I	V 042	050 18 042	96517	40	110	140	170	42	13	-	M12	2	52
			96518	50								3	
			91131	65								4,3	
IV	V 052	050 18 052	96526	45	153	132	168	54	13	-	M16	5,5	126
			96527	60								7,7	
			96528	70								12,2	
IV	V 062	050 18 062	96537	45	210	180	220	74	18	-	M20	15	245
			96536	60								22	
			96535	70								32	
FAIL SAFE													
III	RA 50	17-1463-1	10-00503	35	65	76,2	94	35	8,5	10	M12	0,55	25
			10-00504	45								0,8	
			10-00506	70								2,4	
III	V 033	050 18 033	96538	40	82	105	134	33	11	5	M12	0,5	31
			96511	50								0,7	
			96513	65								1	
II	RA 100	17-2320-1	10-00106	40	79	110	130	30	9	12	M10	1,05	15
II	RA 100	17-2321-1	10-00107	60	79	110	130	30	9	12	M10	2,4	15
II	RA 100	17-2322-3	10-00166	40	79	110	130	30	9	12	M12	1,05	25
II	RA 100	17-2323-1	10-00167	60	79	110	130	30	9	12	M12	2,4	25
II	RA 200	17-2326-1	10-00110	40	94	124	150	35	10	15	M10	1,8	15
II	RA 200	17-2327-1	10-00111	60	94	124	150	35	10	15	M10	2,8	15
II	RA 200	17-2328-3	10-00165	40	94	124	150	35	10	15	M12	1,8	25
II	RA 200	17-2329-1	10-00091	60	94	124	150	35	10	15	M12	2,8	25
III	RA 350	17-2330-3	10-00172	40	101	140-148	175	38	14	18	M12	2,5	25
III	RA 350	17-2331-1	10-00173	60	101	140-148	175	38	14	18	M12	4,5	25
III	RA 350	17-2332-2	10-00112	40	101	140-148	175	38	14	18	M16	2,5	50
III	RA 350	17-2333-1	10-00113	60	101	140-148	175	38	14	18	M16	4,5	50
I	V 043	050 18 043	96520	40	110	140	170	46,5	13	-	M12	2	52
			596521	50								3	
			96522	65								4,3	
IV	V 053	050 18 053	96529	45	153	132	168	59,5	13	-	M16	5,5	126
			96530	60								7,7	
			96531	70								12,2	
II	RA 500	17-2334-1	10-00116	40	123	158	192	41	14	18	M16	4,5	50
II	RA 500	17-2335-1	10-00117	60	123	158	192	41	14	18	M16	7	50
II	RA 800	17-4016-1	10-00118	40	144	182	216	46	14	18	M16	7,5	50
II	RA 800	17-4017-1	10-00119	60	144	182	216	46	14	18	M16	13	50
IV	RA 1200	17-4031-1	10-00154	40	161	140	170	58	14	-	M20	9	100
IV	RA 1200	17-4032-2	10-00155	60	161	140	170	58	14	-	M20	16	100
IV	RA 1800	17-4033-2	10-00156	40	181	160	190	66,5	14	-	M20	13	100
IV	RA 1800	17-4034-1	10-00157	60	181	160	190	66,5	14	-	M20	21	100
IV	V 063	050 18 063	49040497	45	210	180	220	74	18	-	M20	15	245
			49040498	60								22	
			49040499	70								32	

RAB Mount

Similar in design to the RA and RAEM range, the RAB uses rubber in shear and compression for optimum stiffness characteristics and horizontal stability. Especially effective on small 1, 2 and 3 cylinder diesel engines where the special compound employed provides effective isolation of vibration while eliminating much of the excessive movement normally associated with 1-3 zinc plated cylinder engines.

Advantages:

- Rubber features are utilized effectively combining compression and shear
- Tight Tolerances on dynamic stiffness rate for accurate vibration calculations
- Loading rating options, 10-130 kg
- Corrosion protected to cope with arduous environments on land or marine applications
- Fitted as standard with an integral fail-safe device with resilient stop, making the RA ideal for use in mobile applications
- Domed shape cover to protect against oil contamination
- The RAB mounts can accommodate occasional vertical shock loads up to 5G and shock loads up to 2G in other directions.

Typical applications:

- Pumps
- Diesel engines
- Marine and Industrial gensets
- Emergency power packs

Technical Drawing

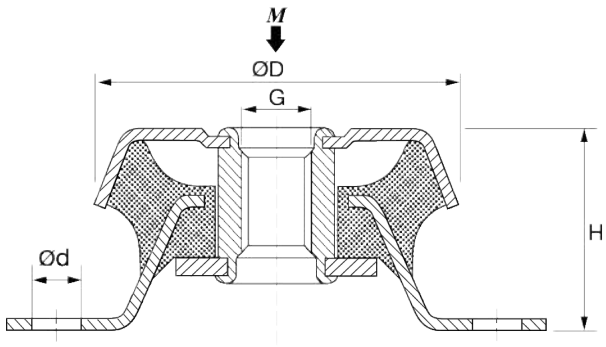

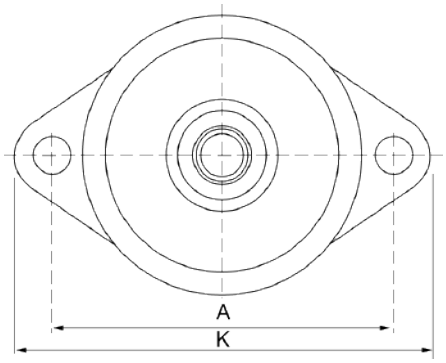

Product Data

REFERENCE	DRAWING NO.	PART NO.	DIMENSIONS (mm)						MAX. LOAD (N)	MAX. BOLT TORQUE (Nm)
			ØD	A	H	K	Ød	G		
RAB 3	17-4004-1	10-00180	63	76	35	93,5	8,5	M12	700	25
RAB 2	17-4141-1	10-00179	63	76	35	93,5	8,5	M12	1050	25
RAB 0	17-4092-1	10-00178	63	76	35	93,5	8,5	M12	1300	25

RAEM Mount

The RAEM is a universal mounting for applications demanding MAX.imum vibration isolation. It is a further development of the RA mount, where EM stands for 'extra movement' and is suitable for both light and heavy machines.

For normal speeds of 1500 RPM the RAEM type provides a degree of isolation of 85-95%, and gives good isolation with low frequency machines.

Advantages:

- RAEM offers nominally 70% extra deflection over standard RA mounts
- Wide load rating options, 30-3400 kg
- Corrosion protected to cope with arduous environments on land or marine applications
- Fitted as standard with an integral fail-safe device with resilient stop, making the RA ideal for use in mobile applications
- Domed shape cover to protect against oil contamination
- The RAEM mounts can accommodate occasional vertical shock loads up to 5G and shock loads up to 2G in other directions

Typical applications:

- HVAC units
- Marine gensets
- Industrial gensets
- Refiners
- Compressors
- Industrial fans
- Large milling machinery

Technical Drawing

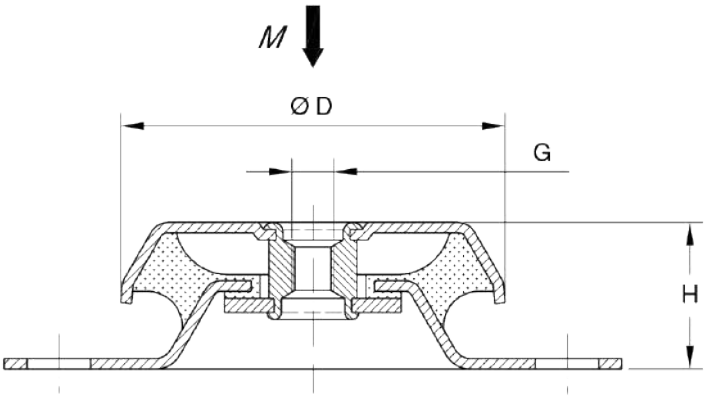

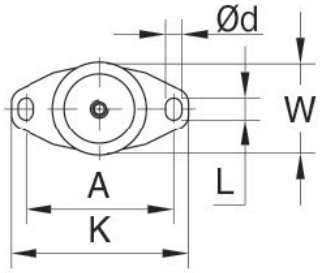

RAEM60

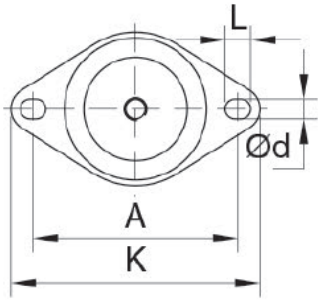

RAEM350

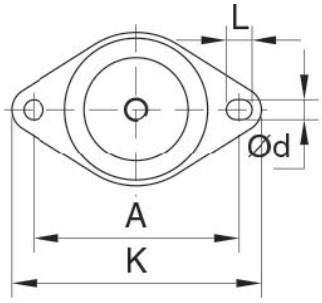

RAEM40, RAEM125, RAEM800

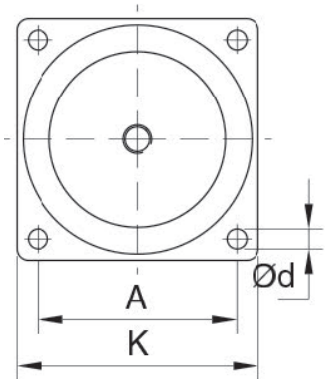

RAEM1500, RAEM2500

Product Data

REFERENCE	DRAWING NO.	PART NO.	HARDNESS (IRHD)	DIMENSIONS (mm)							MAX. LOAD (N)	MAX. BOLT TORQUE (Nm)
				ØD	A	H	K	Ød	L	ØG		
RAEM 40	17-4023-1	10-00122	40	64	88	35,5	110	9	12	M10	300	15
RAEM 40	17-4024-1	10-00123	60	64	88	35,5	110	9	12	M10	600	15
RAEM 60	17-4025-1	10-00183	40	63	100	35,5	120	11	15	M12	600	25
RAEM 60	17-4026-2	10-00184	60	63	100	35,5	120	11	15	M12	1200	25
RAEM 125	17-2336-1	10-00108	40	84	110	35,5	135	11	15	M10	800	15
RAEM 125	17-2338-1	10-00109	60	84	110	35,5	135	11	15	M10	1800	15
RAEM 125	17-2336-2	10-00168	40	84	110	35,5	135	11	15	M12	800	25
RAEM 125	17-2338-2	10-00169	60	84	110	35,5	135	11	15	M12	1800	25
RAEM 350	17-2341-1	10-00174	40	110	140-148	42	175	14	18	M12	2000	25
RAEM 350	17-2342-1	10-00175	60	110	140-148	42	175	14	18	M12	4000	25
RAEM 350	17-2341-2	10-00114	40	110	140-148	42	175	14	18	M16	2000	50
RAEM 350	17-2342-2	10-00115	60	110	140-148	42	175	14	18	M16	4000	50
RAEM 800	17-2347-2	10-00120	40	155	182	54	216	14	18	M16	4500	50
RAEM 800	17-2348-1	10-00121	60	155	182	54	216	14	18	M16	8000	50
RAEM 1500	17-4020-1	10-00158	40	182	146	85	180	14	-	M20	9000	100
RAEM 1500	17-4018-1	10-00159	60	182	146	85	180	14	-	M20	17000	100
RAEM 2500	17-4021-2	10-00160	40	224	180	105,5	220	17,5	-	M24	17000	200
RAEM 2500	17-4022-1	10-00161	60	224	180	105,5	220	17,5	-	M24	34000	200

Rubberized Stop Washer

Rubber stop washers are versatile components for effectively limiting movement. They are preferably used for axial path limitation with Conical Mounts or Bushes.These elastomer-coated washers have different stiffnesses and dampening properties.

Typical applications:

- Buffers
- Used with the Metacone range for rebound protection
- Universal applicationss

Technical Drawing

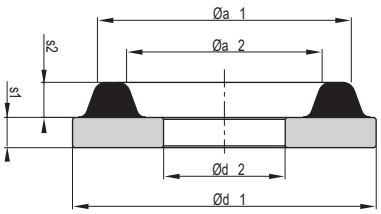

TYPE A

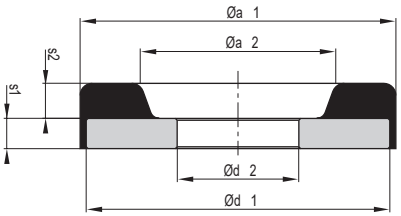

TYPE B

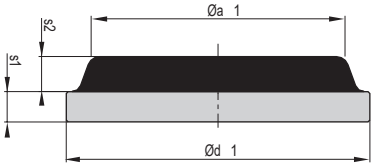

TYPE C

Product Data

DRAWING NO.	PART NO.	DIMENSIONS (mm)					
		$Ød_1$	$Ød_2$	$Øa_1$	$Øa_2$	S_1	S_2
TYPE A							
039 18 005	93127	49	12,5	44	28	3	3
	93950						
077 18 700	511928	75	16,2	65	47	5	4
077 18 707	49042823	75	16,3	65	47	5	4
040 18 048	90819	75	20,2	65	47	5	6
077 18 007	90831	75	20,2	65	47	4	5
	511081						
077 18 003	90501	90	24,3	78	60	8	8
TYPE B							
077 18 710	49035471	56	16	58	37	5	4
077 18 706	49042822	56	21	58	37	5	4
TYPE C							
077 18 705	60900266	40	-	32,55	-	5	2

SAW Mount Circular

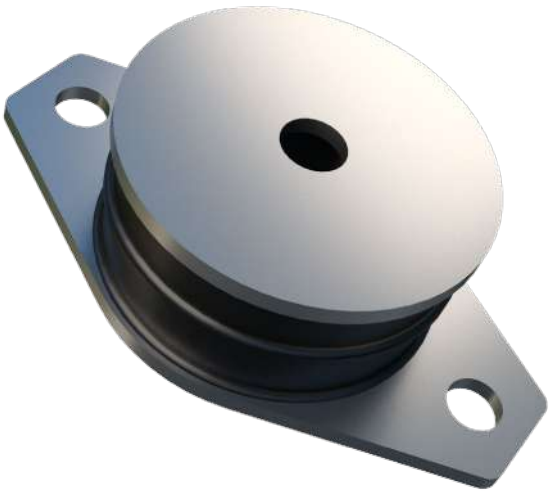

The metal interleaf incorporated in the design provides a higher compression to shear stiffness ratio, thereby increasing the load capacity in the compression or combined compression and shear modes.

The 17-1780 engine mounting features a void in the rubber section to allow the use of a central snubber device. 17-1780 can be fitted with a rebound washer for mobile applications.

Typical applications:

- Vibratory rollers
- Small vibrating screens
- Small engines

Technical Drawing

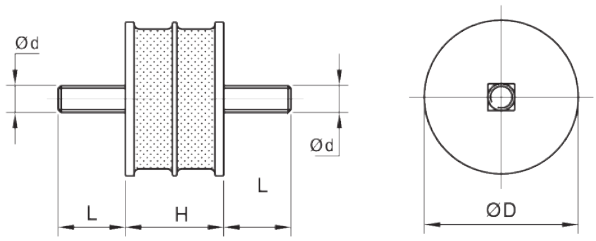

17-1392

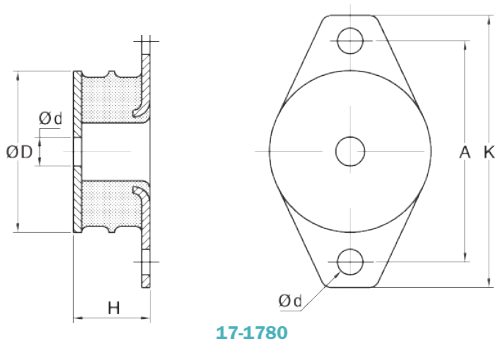

17-1780

Product Data

DRAWING NO.	PART NO.	HARDNESS (IRHD)	DIMENSIONS (mm)								MAX. LOAD (N)	
			ØD	H	Ød	L	A	K	G	h	COMPRESSION	SHEAR
17-1392	10-00492	45	57	37	M10	25	-	-	-	-	1200	500
	10-00493	60									2500	700
17-1780	10-00577	45	95	45	-	-	130	160	17	15	1800	1350
	10-00578	60									3500	1600

Product images are graphical representations. Actual items may differ in appearance

SAW Mount Rectangular

Rectangular SAW Mounts are also known as 'Sandwich' mounts because they feature a rubber section sandwiched between plates of metal.

This arrangement allows a large difference between the compression and shear stiffnesses, thus providing the potential to 'tune' a mounting system by rotating the mountings. Designed for large compressive forces with
minimum deformation, while providing low shear stiffness rates. The combination of a stable low installation height, high compressive strength and low shear stiffness makes SAW a versatile high performance antivibration mounting.

Features:

- Available with plate or stud fixings
- Can be loaded in compression or shear, or a combination of both, for example in a 'Vee' arrangement
- Can be manufactured with or without interleaves to change the ratio of shear to compression stiffness

Typical applications:

- Low frequency machinery
- Vibratory screens
- Crushing equipment
- Engine mounts

Technical Drawing

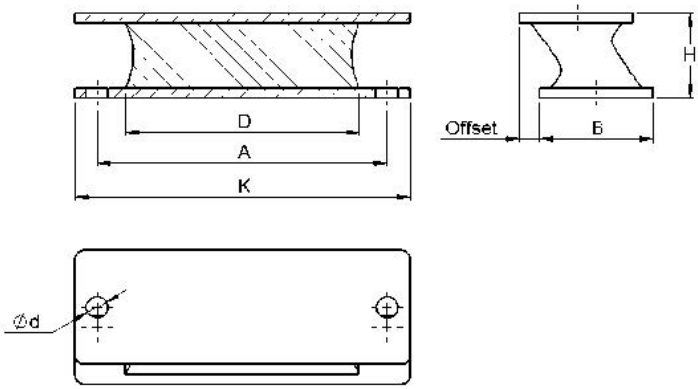

PLATE FIXING

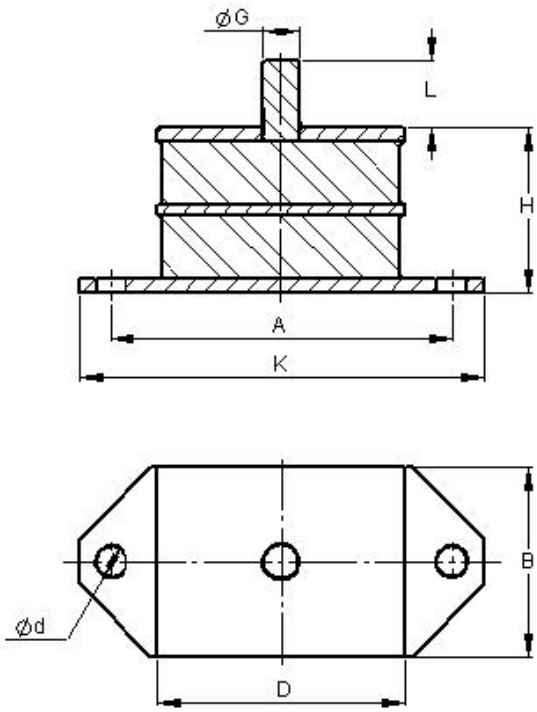

BOLT FIXING

Product Data

REFERENCE	DRAWING NO.	PART NO.	HARDNESS (IRHD)	DIMENSIONS (mm)								MAX. LOAD (kN)		STIFFNESS (N/mm)	
				A	B	K	H	D	Ød	t	Offsets	COMPRESSION	SHEAR	COMPRESSION	SHEAR
SAW RECTANGULAR - PLATE FIXING															
	31-0322	10-00658	45	89	57	108	43	63,5	11	5	-	1,8	0,5	895	36
		10-00659	60									3,6	0,75	1530	72
	31-0242	10-00648	45	146	57	168	43	127	11	5	-	4,5	1,2	1765	80
		10-00651	60									9	1,5	3408	160
		10-00652	70									10,5		6343	240
	31-0285	10-00656	45	14	57	168	43	127	11	5	-	2,75	1,5	767	72
		10-00657	60									5,46		1655	144
	051 18 004	96787	50	146	57	168	51	117,5	10,8	4	11	1,4	1,1	400	70
		96788	60									2,8	1,9	800	130
		96789	65									3,06	2	870	150
		96790	75									4,7	2,2	1340	200
	051 18 723	49038296	65	295	112	322	90	-	14	8	12	8	5,5	2700	460
	051 18 002	96791	50	146	57	168	43,2	127	10,8	4	-	7,4	1,7	2740	130
		96793	60									9	2,2	3330	200
		96792	70									15,1	2,4	5590	240
		96794	75									18,9	3	7000	380
	051 18 719	49002463	65	-	110	290	50	240	-	10	-	25	5,8	12500	480
SAW 125	17-4058	10-00141	40	118	148	148	52	-	13,5	5	-	22,5	2,4	6000	115
		10-00142	60									45	5,7	13000	250
	051 18 720	49002649	50	235	170	255	49	140	9	6	-	41	4	20500	500
		49002650	65									98	7,5	49000	940
SAW 150	17-4059	10-00143	40	136	166	166	63	-	13,5	6	-	37,5	3,3	7505	140
		10-00144	60									75	8,5	17200	320
SAW 200	17-4060	10-00075	40	184	220	220	82	-	17	8	-	60	6	10000	200
		10-00076	60									120	12	20000	400
SAW 300	17-4061	10-00077	40	270	310	310	120	-	22	10	-	150	15,75	16000	340
		10-00078	60									300	31,5	31000	700

DRAWING NO.	PART NO.	HARDNESS (IRHD)	DIMENSIONS (mm)									MAX. LOAD (N)		STIFFNESS (N/mm)	
			A	B	K	H	D	Ød	t	ØG	L	COMPRESSION	SHEAR	COMPRESSION	SHEAR
SAW RECTANGULAR - BOLT FIXING															
31-0406	10-00661	45	74,5	41	89	36	54	6,5	2,5	M8	14	900	400	290	29
	10-00971	60										1800	700	560	57
	10-00663	70										2500	900	832	85
051 18 001	96796	50	75	41	90	35,8	54	6,5	2,5	M8	14	1200	440	500	40
	96797	50										1500	500	630	50
	96798	65										2300	600	960	80
	96745	75										3000	800	1250	110

Spherilastik Bearings

A heavy duty flexible bearing which combines high load capacity with the ability to accommodate torsional and angular movements in all planes without lubrication and metal to metal wear. It is available with center bore or solid member depending on fixing requirements.

General guidance notes for selection:

- Properties quoted for the components in this document relate to continuous steading loading or deformation conditions
- For continuous dynamic cyclic loading or deformation, the maximum values should be reduced to approximately 30% of the figures quoted, depending on frequency.

For medium and low incidence loading and deformation, the tabled values may be increased up to 2 to 3 times.
Combined stressing in the different modes and the effects of stress reversals may require a more critical assessment.

Typical applications:

- Traction and braking reaction rods
- Hydraulic damper fixings

Technical Drawing

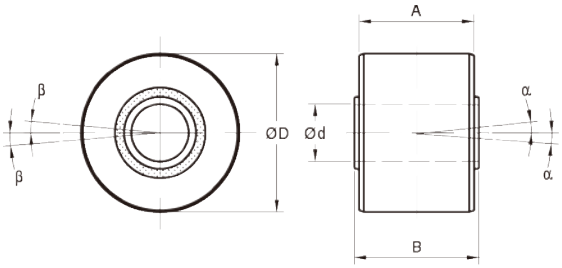

SPERILASTIK® BEARINGS, CENTRE BORE TYPE

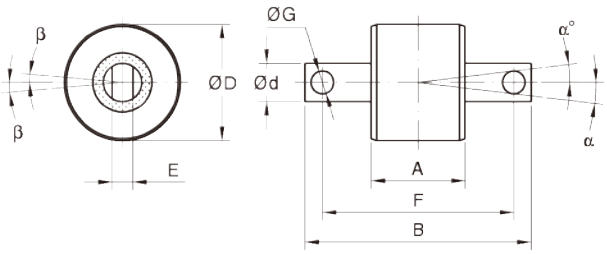

SPERILASTIK® BEARINGS, TRUNNION TYPE

Product Data

DRAWING NO.	PART NO.	DIMENSIONS (mm)									RADIAL		TORSION		CONICAL	
		Housing		Ød	Tolerance for Ød	A	B	E	F	G	STIFFNESS (kN/mm)	MAX. LOAD (kN)	STIFFNESS (Nm/deg)	±β (degrees)	STIFFNESS (Nm/deg)	±α (degrees)
		ØD	Tolerance for ØD													
SPHERICAL MOUNT – CENTRE BORE																
054 18 036	90721	45	+0.07/+0.086	16	-0/+0.043	35	42	-	-	-	22	12	6	4	4	4
054 18 068	92525	65	+0.041/+0.087	16	-0/+0.027	32	60	-	-	-	23	18	6	9	6	5
13-1316	10-00257	66,7	-0.04/+0	25,4	-0/+0.08	47,6	54	-	-	-	70	34	16	8	16	6
054 18 191	93644	75	+0.043/+0.089	20	-0/+0.033	46	50	-	-	-	34	20	24	4	20	4
054 18 070	92041	90	+0.051/+0.105	30	-0/+0.033	45	76	-	-	-	85	45	47	3	40	3
13-2106-1	10-00291	90,5	-0.03/+0.01	28,6	-0.02/+0.12	70	76,2	-	-	-	100	58	49	8	49	6
13-1006	10-00237	90,5	-0.03/+0.02	28,6	-0.03/+0.05	70	76,2	-	-	-	93	58	49	8	49	6

DRAWING NO.	PART NO.	DIMENSIONS (mm)									RADIAL		TORSION		CONICAL	
		Housing		Ød	Tolerance for Ød	A	B	E	F	G	STIFFNESS (kN/mm)	MAX. LOAD (kN)	STIFFNESS (Nm/deg)	±β (degrees)	STIFFNESS (Nm/deg)	±α (degrees)
		ØD	Tolerance for ØD													
SPHERICAL MOUNT – CENTRE BORE																
054 18 163	93418	100	+0.051/+0.105	53	-0/+0.03	46,5	50	-	-	-	44	27	88	3	56	3
	93643										50	34	107		68	
13-1285	10-00255	104,8	-0.04/+0	38,1	-0/+0.08	76,2	82,6	-	-	-	155	98	63	8	62	7
054 18 122	2118217	110	+0.054/+0.089	40	-0/+0.039	76	78	-	-	-	71	64	75	3	57	3
13-1180	10-01099	127	-0.02/+0.04	44,5	-0/+0.08	101,6	104,8	-	-	-	87	93	119	7	108	7
13-4007	10-00273	127	-0.02/+0.04	50,1	-0.1/+0.04	101,6	104,8	-	-	-	260	220	262	6	227	5
13-2624	10-03344	127	-0.02/+0.04	31	-0/+0.5	101,6	120	-	-	-	87	93	119	7	108	7
054 18 756	509887	130	+0.027/+0.067	60	-0/+0.03	87	98	-	-	-	336	100	182	3	243	3
054 18 740	2124226	140	+0.122/+0.185	60	-0/+0.46	90	100	-	-	-	170	80	478	3	308	6
13-1990	10-03251	150	-0.02/+0.07	60	-0/+0.1	120	133,8	-	-	-	240	250	300	7	280	6
13-2623	10-03723	150	-0.02/+0.07	37	-0/+0.25	120	140	-	-	-	150	205	155	8	125	8
054 18 204	596836	172	-0.15/+0.21	80	-0/+0.03	120	138	-	-	-	120	170	445	3	295	3
SPHERICAL MOUNT – TRUNNION																
13-4089-00	10-01608	45	-0.01/+0.05	30	–	36	105	12	75	13	55	7	6	8	6	8
13-2202-1	10-00302	66,7	-0/+0.1	35	–	47,6	120	20	90	13	70	34	12	8	16	6
054 18 711	462023	66,67	+0.032/+0.062	40	-0.25/+0.25	47,6	135	16	96	18	56	50	34	3	24	3
054 18 710	465259	66,67	+0.032/+0.062	40	-0.25/+0.25	47,6	135	16	96	18	35	25	23	3	9	3
054 18 732	479059	66,67	+0.032/+0.062	40	-0.25/+0.25	47,6	160	18	120	18	76	25	27	3	20	3
13-2033	10-00283	84	-0/+0.05	40	–	65	155	20	120	17	150	75	49	6	49	6
054 18 202	90205	90	+0.124/+0.178	50	-0.052/+0	65	170	30	130	22	85	46	62	3	43	3
13-2192-1	10-00878	90,5	-0.03/+0.01	48	–	71,4	170	30	130	21	90	58	49	8	49	6
13-2400	10-03615	104,8	-0.04/+0	50,5	–	76,2	195	30	152	23	220	150	75	8	71	7
13-2607-1	10-02168	104,8	-0.04/+0	50,5	–	76,2	195	30	152	25	220	150	75	8	71	7
13-2223	10-00304	104,8	-0.04/+0	50,5	–	76,2	170	30	130	19	220	150	79	8	131	6
13-2568	10-02512	104,8	-0.04/+0	50,5	–	76,2	170	30	130	21	220	150	79	8	131	7
054 18 190	92834	110	+0.144/+0.198	54	-0.2/+0.2	80	200	32	150	26	43	50	66	10	71	10
054 18 702	500742	120	+0.144/+0.198	60	–	90	220	40	170	28	120	82	150	10	110	10
13-4011	10-04047	127	-0.02/+0.04	51,5	–	101,6	232	30	190	26	190	220	150	8	125	7
054 18 735	2123524	140	+0.17/+0.233	60	–	100	240	36	190	25	14	40	52	7	34	7

Tilt Cab Mount (TCM)

The Tilt Cab Mount (TCM) is specially designed for high levels of vibration isolation while simultaneously controlling axial movements with an integral buffer. The combination of isolator and buffer results in the mounting functioning with increased effectiveness over a conventional multi-mount system.

The robust and failsafe design enables suitability for ROPS and FOPS cab structures. The mount offers a load range from 180 to 380kg with a rising-rate stiffness characteristic to help limit motion and transmitted acceleration. It's simple press fit and tapered cap to allow cab/clevis to slip over mount without catching. The TCM also features a built-in vertical motion limiter to prevent excessive cab displacements during a shock input, a feature which also protects the bush from overload therefore ensuring long service life.

Technical Drawing

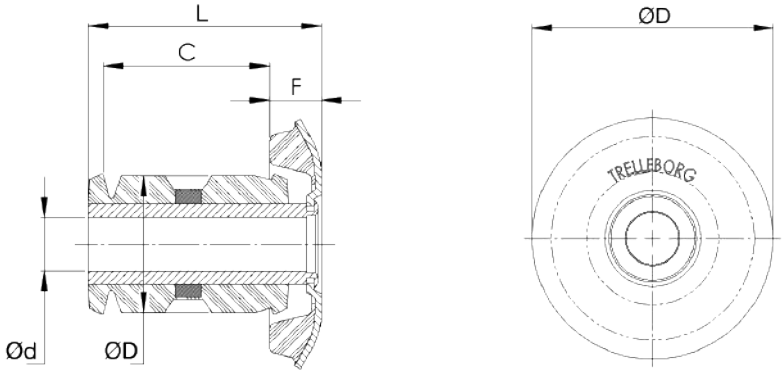

Product Data

DRAWING NO.	PART NO.	HARDNESS (IRHD)	DIMENSIONS (mm)						MAX. LOAD (kN)	STIFFNESS (N/mm)	
			Ød	ØD	F	L	Housing			AXIAL	RADIAL
							$ØD_1$	C			
13-4455-1	10-04845	50	16,2	75	16,2	70	39.1±0.2	50.5±0.5	2	1775	1435
	10-02038	60							4	3465	2275
	10-04846	70							6	5100	3335

UH Mount

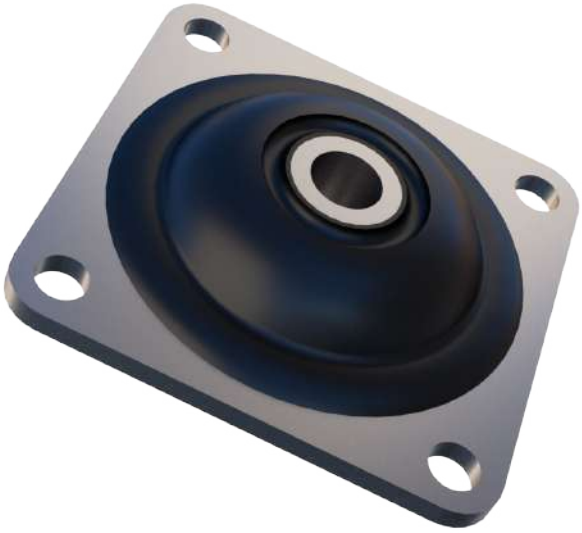

UH is an antivibration mount designed to accommodate axial static and shock loads in both directions. The dynamic natural frequency is constant irrespective of the static load.

UH is particularly suitable for the suspension of both mobile and static cabs as well as platforms on agricultural vehicles. When fitted with overload/ rebound washers, a high strength fail-safe installation is provided.

Moreover, it is possible to alter the characteristics of the mounting by providing a dome-shaped washer at the upper rubber section. This will provide impact resistance to deflection beyond the permissible limit. Effectively isolating vibration and noise, the UH mounting also protects tanks and ancillary equipment against metal fatigue caused by chassis distortion.

Typical applications:

- Tractors
- Excavators
- Lifting cranes
- Forklift trucks
- Forestry vehicles
- Off-road equipment

Technical Drawing

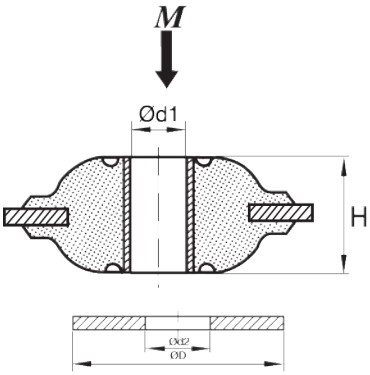

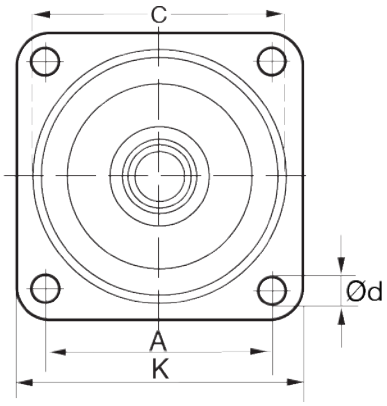

Product Data

REFERENCE	DRAWING NO.	PART NO.	DIMENSIONS (mm)						MAX. LOAD (kN)	MAX. TORQUE (Nm)	WASHER PART NO.
			K	A	H	C	Ød	$Ød_1$			
UH 50	15-4131	10-00086	100,5	80	37	91	10,5	15	2.5	80	20-00608
UH 70	15-4132	10-00088	100,5	80	37	91	10,5	15	4.0	120	20-00608

UD & VP Bushes

These bushes consist of two concentric sleeves with rubber securely bonded between them. Designed to accommodate torsional movements, axial and radial loads. The rubber is pre-stressed to give maximum dynamic strength and durability.

The bonded rubber takes up full movement. Therefore, lubrication or other bearing maintenance is not required. The bush has excellent sound and vibration isolation characteristics, enabling structures fitted with the sleeves to be silent and vibration free.

For vehicle suspension, pivot arms and all types of mechanical linkage, this mount permits oscillating movement through the deflection of rubber in shear. Suitable to replace roller bearings where small motions are required (up to 20 degrees). Reduces shock loads and noise transmission in structures.

Typical applications:

- Vehicle suspension arms
- Vibratory feeders
- Conveyor tracks
- Mechanical linkages
- Pivot bearings

Technical Drawing

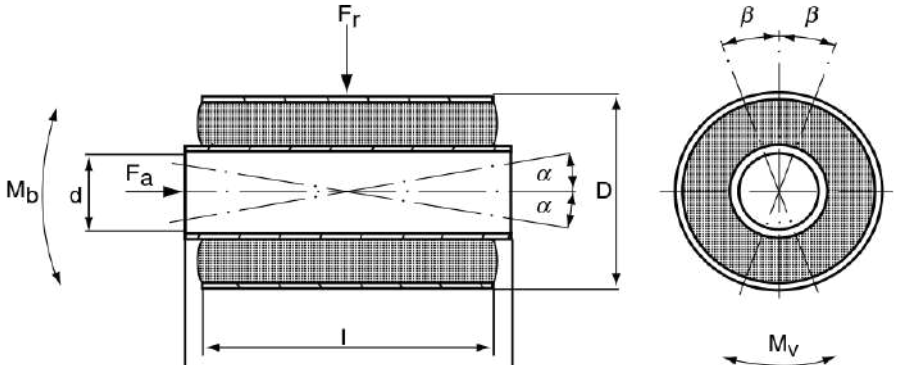

Product Data

REFERENCE*	DRAWING NO.	PART NO.	HARDNESS (IRHD)	DIMENSIONS (mm)						RADIAL		AXIAL			TORSION		
				Ød	Tolerance for Ød	ØD	Tolerance for ØD	l	L	STIFF. (N/mm)	MAX. LOAD (N)	STIFF. (N/mm)	MAX. DEFL. (mm)	MAX. LOAD (N)	MAX. TORQUE (Nm)	STIFF. (Nm/deg)	±β (degr.)
8-2040	001 18 168	90122	65	8	-0/+0.036	20	+0.041/+0.125	35	40	6887	7550	530	1,3	665	4,2	0,6	7
8-2210	001 18 305	91237	65	8	-0/+0.036	22	+0.041/+0.125	12	20	1394	845	138	1,7	228	1,4	0,2	7
10-2220	001 18 156	91089	45	10	-0/+0.036	22	+0.041/+0.125	18,5	20,5	3878	1373	187	0,9	174	1,3	0,3	5
10-2024	001 18 036	90007	65	10	-0/+0.036	20	+0.041/+0.125	20	24	15583	3000	666	0,9	600	2	0,6	3,5
10-2216	001 18 337	91497	65	10	-0/+0.036	22	+0.041/+0.125	15	16	4229	2273	321	1,1	363	2,9	0,6	5
10-2220	001 18 156	90112	65	10	-0/+0.036	22	+0.041/+0.125	18,5	20,5	7593	3616	444	1,0	459	3,6	0,7	5,5
10-2230	001 18 037	90009	65	10	-0/+0.036	22	+0.041/+0.125	20	24	7876	4000	525	0,9	484	3,8	0,8	5
10-2418	13-1230	10-00249	55	10	-0/+0.13	24	-0/+0.8	15	18	1360	500	170	1,7	275	3	0,24	13
10-2524	001 18 039	90012	45	10	-0/+0.036	25	+0.041/+0.125	20	24	1443	1045	129	1,4	184	1,4	0,2	6,5
		90011	65							3978	2752	354		484	3,8	0,6	
10-2525	13-4127	10-00021	60	10	-0.1/+0.1	25	+0.05/+0.25	20	25	2000	2300	170	4,4	750	5	0,3	15
10-2540	13-4128	10-00022	60	10	-0.1/+0.1	25	+0.05/+0.25	35	40	2350	3800	380	3,9	1482	6	0,4	15
12-2228	001 18 040	90014	65	12	-0/+0.043	22	+0.041/+0.125	24	28	21995	7703	783	0,8	622	5,3	1,3	4
12-2437	001 18 287	92683	65	12	-0/+0.043	24	+0.041/+0.125	36	37	13094	11644	802	1,2	933	8	1,5	5,5
12-2528	001 18 041	90016	65	12	-0/+0.043	25	+0.048/+0.132	24	28	7983	5524	528	1,3	663	6	1,2	5

*REFERENCE is defined as Ød-ØDL

REFERENCE*	DRAWING NO.	PART NO.	HARDNESS (IRHD)	DIMENSIONS (mm)						RADIAL		AXIAL			TORSION		
				Ød	Tolerance for Ød	ØD	Tolerance for ØD	l	L	STIFF. (N/mm)	MAX. LOAD (N)	STIFF. (N/mm)	MAX. DEFL. (mm)	MAX. LOAD (N)	MAX. TORQUE (Nm)	STIFF. (Nm/deg)	±β (degr.)
12-2828	001 18 043	90076	60 AEM 23	12	-0/+0.043	28	-0.05/+0.132	24	28	4500	2622	400	11,5	471	4,2	0,7	6
12-3028	001 18 044	49035877	40	12	-0/+0.043	30	+0.048/+0.132	24	28	1330	1097	97	2,2	211	1,9	0,3	7
		90019	65							2685	3447	306		663	6	0,9	
12-3018	001 18 157	90890	45	12	-0/+0.043	30	+0.048/+0.132	17	18	490	671	67	2,7	178	1,6	0,2	7
		90113	65							1538	1768	219	1,9	407	4,2	0,6	
12-3040	001 18 169	49035876	40	12	-0/+0.043	30	+0.048/+0.132	36	40	2409	2425	177	1,8	317	2,8	0,4	7
		90123	65							6419	7615	511	1,9	995	9	1,3	
12-3259	001 18 158	90115	65	12	-0/+0.043	32	+0.060/+0.160	55	59	8621	16444	734	2,1	1520	13,8	1,8	7,5
13-3832	13-1782	10-00277	60	12,7	-0/+0.18	38,1	-0/+0.13	25	32	788	1100	163	3,3	471	11	0,52	22
13-3851	13-1657	10-00271	60	12,7	-0/+0.18	38,1	-0/+0.13	44,5	51	2100	2200	300	3,3	932	16	0,73	22
14-3232	001 18 047	90021	60 NR	14	-0/+0.043	32	-0.06/+0.16	28	32	4000	2330	530	19,2	1040	7	1,0	6,7
14-3532	001 18 048	90022	40	14	-0/+0.043	35	+0.060/+0.160	28	32	2078	1665	155	2,0	303	3,1	0,4	7
		90023	65							4003	4788	418	2,1	871	8,9	1,3	
14-4034	001 18 049	90026	65	14	-0/+0.043	40	+0.060/+0.160	28	34	1756	3619	329	2,6	871	8,9	1,0	8,5
14-3051	13-4273	20-02673	60	14,3	-0.02/+0,1	30,2	-0.04/+0.04	44,5	51	11000	6000	695	1,9	1275	20	1,5	13
15-3530	13-4129	10-00023	60	15	-0.1/+0.1	35	+0.05/+0.25	25	30	3000	3500	220	6,8	1496	9	0,6	15
15-3550	13-4130	10-00024	60	15	-0.1/+0	35	+0.05/+0.25	45	50	6500	6000	520	4,8	2496	15	1	15
16-3365	13-0797	10-00217	60	15,9	-0.03/+0.1	33,4	-0.08/+0	60	65	18800	9500	960	2,1	1560	31	2,4	13
16-4851	13-1004	10-00235	60	15,9	-0.03/+0.15	47,7	-0.08/+0.05	44,5	51	1981	2500	304	4,2	1226	26	1,3	20
16-3025	001 18 440	54004068	65	16	-0/+0.043	30	+0.048/+0.132	25	25	8360	5016	643	1,2	751	8,1	1,5	5,5
16-3038	001 18 050	90028	65	16	-0/+0.043	30	+0.048/+0.132	32	38	14490	10380	851	1,3	1106	12,6	2,5	5
16-3217	001 18 159	90117	65	16	-0/+0.043	32	+0.060/+0.160	16	17	3229	2394	357	1,5	553	6,3	1,1	5,5
16-4038	001 18 054	90032	65	16	-0/+0.043	40	+0.060/+0.160	32	38	2895	5481	393	2,8	1106	12,6	1,7	7,5
18-3220	001 18 170	90124	65	18	-0/+0.043	32	+0.060/+0.160	20	20	10325	5096	559	1,4	760	5,9	1,5	4
18-3442	001 18 055	90033	65	18	-0/+0.043	34	+0.060/+0.160	36	42	19261	12717	1022	1,3	1368	17,1	3,4	5
18-3425	001 18 171	93000	40	18	-0/+0.043	34	+0.060/+0.160	25	25	2942	2158	230	1,4	330	4,1	0,8	5
		91567	65							8414	6206	664		950	11,9	2,4	
20-3846	001 18 060	90035	65	20	-0/+0.052	38	+0.060/+0.160	40	46	18846	15842	961	1,8	1727	24,6	4,9	5
20-4036	001 18 288	91270	65	20	-0/+0.052	40	+0.060/+0.160	36	36	10794	9860	713	2,1	1492	20,4	3,4	6
20-4046	001 18 061	90037	65	20	-0/+0.052	40	+0.060/+0.160	40	46	13404	13440	802	2,2	1727	24,6	4,5	5,5
20-4442	001 18 224	90137	45	20	-0/+0.052	44	+0.070/+0.170	38	42	2559	3625	280	2,2	623	8,9	1,3	7
		91711	65							6082	9547	712	2,3	1641	23,4	3,3	
20-4442	002 18 919	49040213	45 NR	20	-0.15/+0	44	+0.17/-0.07	38	42	2000	1554	280	28,5	814	7,5	1,1	7
		49040227	60 NR							5000	3884	710		2060	18	2,6	
20-4546	001 18 064	90039	65	20	-0/+0.052	45	+0.070/+0.230	40	46	5483	7722	616	2,2	1326	18,9	2,7	7
20-4570	001 18 127	90094	65	20	-0/+0.052	45	+0.070/+0.170	64	70	11915	25285	1117	2,5	2764	39,4	5,6	7
20-4530	001 18 181	2118578	50	20	-0/+0.052	45	+0.070/+0.170	30	30	2056	2545	265	2,2	587	8,3	1,2	7
		91034	65							3847	5620	504	2,6	1296	18,5	2,6	
20-4540	13-4131	10-00025	60	20	-0.1/+0.1	45	+0.05/+0.25	35	40	4000	6800	330	7,9	2607	9	0,6	15
20-4575	13-4132	10-00026	60	20	-0.1/+0.1	45	+0.05/+0.25	70	75	8000	13500	820	6,7	5494	48	3,2	15
20-5046	001 18 065	90040	65	20	-0/+0.052	50	+0.070/+0.230	40	46	3337	8280	531	3,3	1727	24,6	3,1	8
24-5082	001 18 126	90093	65	24	-0/+0.052	50	+0.070/+0.170	76	82	22912	41068	1777	2,2	3938	67,5	10,4	6,5
24-50115	001 18 136	92150	40	24	-0/+0.052	50	+0.070/+0.230	102	115	15549	23399	916	1,8	1683	28,8	4,4	6,6
		90102	65							32960	73490	2092	2,5	5286	90,6	13,9	6,5
24-5070	001 18 624	93126	65	24	-0/+0.052	50	+0.070/+0.170	64	70	22331	26797	1353	2,2	3037	52	8,0	6,5
25-4056	001 18 069	90043	65	25	-0/+0.052	40	+0.060/+0.160	50	56	74470	37741	1795	1,3	2373	40,6	11,6	3,5
		49004699	60 NBR 68							57140	19420	2200	8,7	1962	34	9,7	
25-4040	001 18 130	90100	65	25	-0/+0.052	40	+0.060/+0.160	40	40	40400	22392	1419	1,2	2004	33,2	8,3	4

*REFERENCE is defined as Ød-ØDL

Product images are graphical representations. Actual items may differ in appearance

REFERENCE*	DRAWING NO.	PART NO.	HARDNESS (IRHD)	DIMENSIONS (mm)						RADIAL		AXIAL			TORSION		
				Ød	Tolerance for Ød	ØD	Tolerance for ØD	l	L	STIFF. (N/mm)	MAX. LOAD (N)	STIFF. (N/mm)	MAX. DEFL. (mm)	MAX. LOAD (N)	MAX. TORQUE (Nm)	STIFF. (Nm/deg)	±β (degr.)
25-4040	001 18 130	477724	60 NBR 68	25	+0.052/-0	40	+0.060/+0.160	40	40	27500	10681	1230	10,6	1324	22	5,5	4
25-4030	001 18 392	91566	65	25	-0/+0.052	40	+0.060/+0.160	30	30	39200	13721	1255	1,1	1424	24,4	7,0	3,5
25-4223	001 18 163	90955	65	25	-0/+0.052	42	+0.070/+0.170	22	23	8935	6339	735	1,6	1140	19,5	4,9	4
25-4556	001 18 070	90044	65	25	-0/+0.052	45	+0.070/+0.170	50	56	21383	24351	1347	1,9	2591	44,4	8,9	5
25-5056	001 18 072	90045	65	25	-0/+0.052	50	+0.070/+0.170	50	56	10229	18012	963	2,7	2591	44,4	6,8	6,5
25-5045	13-4133	10-00027	60	25	+/-0.1	50	+0.05/+0.25	40	45	4500	9000	450	8,4	3780	46	3,3	14
25-5085	13-4134	10-00028	60	25	+/-0.1	50	+0.05/+0.25	80	85	10500	18000	960	7,8	7488	69	4,9	14
25-5560	002 18 920	49040214	50	25	-0.15/+0	55	+0.087/+0.207	55	60	3417	7018	316	3,6	1131	19,3	2,8	7
		49040228	65							11230	17687	1023	2,8	2850	48,8	7,0	
26-4542	001 18 564	49016003	65	25,7	-0/+0.052	44,5	-0.1 / +0	38	41,5	22293	16368	1392	1,5	2081	37,6	8,4	4,5
28-5254	002 18 005	49017278	65	28	-0/+0.052	52	+0.087/+0.207	48	54	13700	23846	906	3,4	3078	58	9,7	6
30-4862	001 18 173	90126	65	30	-0/+0.052	48	+0.070/+0.170	56	62	76530	45918	2685	1,3	3386	67,7	19,3	3,5
30-5066	001 18 075	90046	65	30	-0/+0.052	50	+0.070/+0.170	60	66	40586	39901	1917	1,9	3628	72,5	16,1	4,5
		90328	45							15349	15151	734		1377	27,5	6,1	
30-6068	001 18 078	90051	65	30	-0/+0.052	60	+0.087/+0.207	60	68	12758	22655	1398	2,5	3471	69,4	10,7	6,5
30-6026	002 307 649	54004190	65	30	-0/+0.052	60	+0.087/+0.207	23,3	26	2073	3576	455	3,1	1409	28,1	4,0	7
30-6055	13-4135	10-00029	60	30	-0.2/+0	60	+0.05/+0.25	45	55	5000	12000	530	9,6	5088	78	5,6	14
30-6570	001 18 220	91092	40	30	-0/+0.052	65	+0.087/+0.207	70	70	4079	9778	388	3,8	1472	29,4	3,9	7,5
		91318	65							10540	28122	1065	4,0	4232	84,4	11,3	
		95300	60 NBR 68				-0.087/+0.21			12230	15439	970	37,7	3728	55	8,6	6,4
30-6570	002 18 885	49004145	65	30	-0/+0.052	65	+0.207/+0.087	70	70	11877	28122	1077	3,9	4232	84,6	11,3	7,5
32-5572	001 18 079	90052	65	32	-0/+0.062	55	+0.087/+0.207	64	72	82016	55418	2645	1,7	4422	101	25,3	4
32-5654	001 18 645	90535	60	32	-0.15/+0	56	+0.087/+0.207	49	54	19662	19171	850	2,9	2470	53,6	10,7	5
35-6560	13-4137	10-00031	60	35	-0.2/+0	65	+0.05/+0.25	50	60	8500	16000	720	9,2	6624	92	7,7	12
35-7145	13-1698	10-00276	60	35	-0.07/+0.1	71,2	-0.08/+0.05	41	45	3800	4500	347	5,1	2158	97	6,9	14
36-6580	001 18 084	90057	65	36	-0/+0.062	65	+0.087/+0.207	72	80	22862	44384	1684	3,1	5224	125,3	22,8	5,5
38-6488	001 18 117	49004031	40	38	-0/+0.062	64	+0.087/+0.207	80	88	23676	24860	1014	2,1	2162	55,6	13,9	4
		90089	65							57537	65471	2119	2,7	5695	146,4	32,5	4,5
40-6446	001 18 561	92795	65	40	-0/+0.062	64	+0.087/+0.207	43	46	23415	22830	1204	2,8	3417	89,8	22,5	4
40-6588	001 18 088	90060	65	40	-0/+0.062	65	+0.087/+0.277	80	88	66660	72888	2780	2,3	6357	167,1	37,1	4,5
40-7065	13-4139	10-00033	60	40	-0.2/+0	70	+0.05/+0.25	55	65	17000	20500	870	9,5	8265	138	11,5	12
40-7588	001 18 090	90061	65	40	-0/+0.062	75	+0.102/+0.222	80	88	23490	43416	1741	3,5	6083	159,8	24,6	6,5
42-7845	001 18 285	91820	65	42	-0/+0.062	78	+0.102/+0.222	45	45	8390	16698	1041	3,6	3719	106,2	19,3	5,5
45-75100	001 18 093	90063	65	45	-0/+0.062	75	+0.102/+0.222	90	100	55580	82710	2505	3,2	8084	204,2	40,8	5
45-7570	13-4141	10-00035	60	45	-0.2/+0	75	+0.05/+0.25	60	70	20000	24000	1100	9,1	10010	240	20	12
45-8045	001 18 297	91424	65	45	-0/+0.062	80	+0.102/+0.222	45	45	7487	18035	744	5,4	4042	120,1	21,8	5,5
50-80110	001 18 095	93394	60 NBR 68	50	-0/+0.062	80	-0.1/+0.22	100	110	94440	82535	3750	23,1	8829	300	68,2	4,4
		90066	65				+0.102/+0.222			123430	123982	3646	2,7	10019	332	83,0	4
50-8075	13-4143	10-00037	60	50	-0.2/+0.2	80	+0.05/+0.25	65	75	30000	28500	1350	8,9	12015	275	25	11
50-95110	001 18 360	90900	65	50	-0/+0.062	95	+0.124/+0.264	100	110	25331	67076	2063	4,6	9587	317,7	48,9	6,5
50-100110	001 18 097	90070	65	50	-0/+0.062	100	+0.124/+0.264	100	110	18670	61328	1720	5,6	9587	317,7	45,4	7
50-125195	001 18 102	96921	40	50	-0/+0.062	125	+0.170/+0.420	138	195	6020	30877	692	7,2	4973	170,5	21,3	8
		96141	65							14010	88804	1808	7,9	14303	490,3	61,3	
57-7371	001 18 716	49012091	65	57	-0/+0.03	73	+0.002/+0.021	62	71	164734	92663	4908	1,2	6081	215,4	107,7	2
58-9395	001 18 141	49039427	50	58	-0/+0.74	93	+0.124/+0.344	85	95	20840	32198	1226	3,1	3845	145	32,2	4,5
		90106	65							49180	77653	3030		9273	349,7	77,7	
70-126120	001 18 318	92770	65	70	-0/+0.74	126	+0.170/+0.330	111	120	64240	126486	3420	4,6	15596	757,5	168,3	4,5
75-10050	001 18 489	92265	60	75	-0/+0.46	100	-0.025/+0.125	50	50	92935	43840	2863	2,0	5758	261,5	104,6	2,5

*REFERENCE is defined as Ød-ØDL

REFERENCE*	DRAWING NO.	PART NO.	HARDNESS (IRHD)	DIMENSIONS (mm)						RADIAL		AXIAL			TORSION		
				Ød	Tolerance for Ød	ØD	Tolerance for ØD	l	L	STIFF. (N/mm)	MAX. LOAD (N)	STIFF. (N/mm)	MAX. DEFL. (mm)	MAX. LOAD (N)	MAX. TORQUE (Nm)	STIFF. (Nm/deg)	±β (degr.)
75-141165	001 18 641	93851	65	75	-0/+0.46	141	-0/+0.2	155	165	83444	219039	4524	5,2	23593	1280	256,0	5
80-125102	001 18 485	49008954	75	80	-0/+0.74	125	+0.170/+0.330	107	102	146293	235890	5760	4,5	25994	1411	403,1	3,5
100-140120	001 18 772	96165	65	100	-0/+0.87	140	+0.170/+0.420	110	120	167270	204285	5430	3,8	20365	1303	434,3	3
110-160180	001 18 802	96246	65	110	-0/+0.87	160	+0.190/+0.440	170	180	195096	375101	6047	5,6	33721	2312	578,0	4
124-180230	001 18 805	96248	65	124	-0/+0.1	180	+0.210/+0.460	220	230	455380	798614	10755	4,9	53204	4256	1216,0	3,5
		96247	75							630114	1240223	17860	4,6	82624	6610	1888,6	
136-218235	001 18 531	480706	60 NBR 68	136	-0/+0.01	218	+0.44/-0.26	202	235	130000	252460	7500	67,4	51503	4700	1000,0	4,7
136-218235	001 18 531	93059	65	136	-0/+0.1	218	+0.258/+0.443	202	235	109730	357021	6892	6,0	41326	3660	813,3	4,5

*REFERENCE is defined as Ød-ØDL

Vee Mount Keillager

Vee Mount have ideal stiffness characteristics for rail vehicle engine suspension. The vertical stiffness rate ensures that when the mounting is properly loaded, the vertical natural frequency does not coincide with the body bending frequency and the high longitundinal stiiffness controls shunting shock motion. The mounting is usually connected to the solebars via the base casting, and a buffer is attached to the Vee section casting to limit tensile loads.

Features:

- Three dissimilar translational stiffness for the best vibration isolation and motion control
- Strong castings for safety and reliability

A high load capacity mounting with relatively large rubber volume providing a high degree of vibration and noise isolation and makes it ideally suited for suspending engines installed in public service and goods vehicles.

Technical Drawing

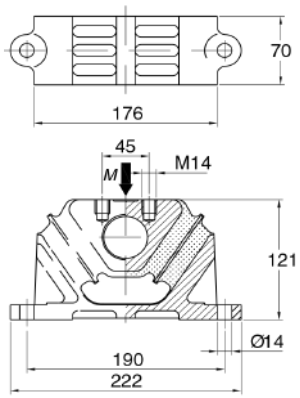

11-1033
11-1082

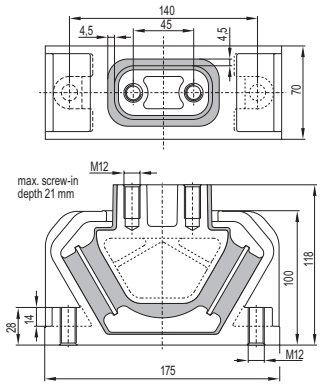

033 18 700 - Aluminium
033 18 701 - Aluminium, interleaved

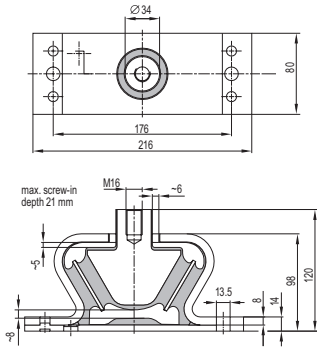

033 18 720 - Steel, interleaved
033 18 730 - Steel

Product Data

DRAWING NO.	PART NO.	HARDNESS (IRHD)	AXIAL		RADIAL STIFFNESS (N/mm)	
			MAX. LOAD (kN)	STIFFNESS (N/mm)	X	Y
NON-INTERLEAVED						
11-1082/1	10-00201	35	0,9	148	407	29,6
	10-00203	60	2,6	440	1210	88
11-1082	10-00849	40	1,15	172	473	34,4
	10-00205	55	2,1	316	869	63,2
	10-00804	60	2,6	440	1210	88
	10-00206	65	3,15	538	1479,5	107,6
033 18 730	49025346	40 NR 39	1,75	350	700	100
	49025347	50 NR 39	2,92	580	1400	200
	49025348	60 NR 39	4	800	2400	330
033 18 700	511470	42 NR 39	2,2	440	1700	500
	2129315	50 NR 39	3,4	680	2600	770
	2129317	60 NR 39	5,3	1060	4000	1200

DRAWING NO.	PART NO.	HARDNESS (IRHD)	AXIAL		RADIAL STIFFNESS (N/mm)	
			MAX. LOAD (kN)	STIFFNESS (N/mm)	X	Y
INTERLEAVED						
033 18 720	49025343	40 NR 39	4,5	900	3200	185
	49025344	50 NR 39	6	1200	4800	280
	49025345	60 NR 39	10	2000	8000	465
11-1033	10-00196	50	4,7	850	2337,5	170
	10-00843	55	5,9	1030	2832,5	206
	10-00197	60	7,1	1200	3300	240
	10-03793	65	9	1450	3987,5	290
	10-01026	70	10,9	1800	4950	360
033 18 701	2129378	45 NR 39	5,8	1160	4500	1300
	2129321	50 NR 39	8,9	1780	6900	2000
	2129323	60 NR 39	14	2800	10800	3200

Product images are graphical representations. Actual items may differ in appearance

VT Mount

The VT Mount has been designed so that upon installation the rubber section is subjected to shear loads, thus providing high deflection even at low loads. Two different parts are available. The VT-upper provides for protection against tension preventing the isolated unit from falling down if overloading occurs.

VT-lower is designed to accept horizontal compression loads and allow shear deflection vertically.

Typical applications:

- Instrument cabinets
- Light machinery
- Fans
- Refrigeration units

Technical Drawing

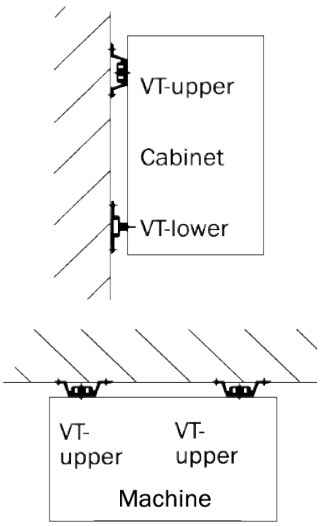

MOUNTING INSTRUCTIONS

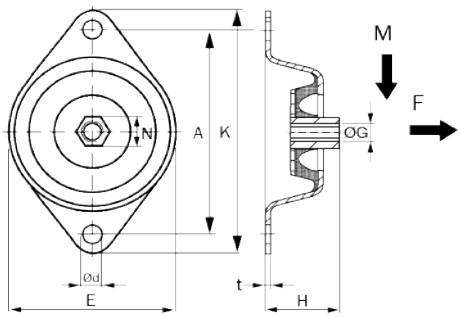

VT UPPER

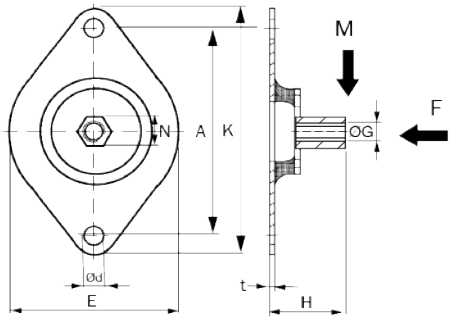

VT LOWER

Product Data

REFERENCE	DRAWING NO.	PART NO.	HARDNESS (IRHD)	DIMENSIONS (mm)								MAX LOAD (N)	
				E	K	A	H	Ød	N	t	ØG	RADIAL (M)	AXIAL (F)
VT UPPER	17-4378	10-01369	40	75	114	96	33	9	15	1,5	M8	140	300
VT UPPER	17-4379	10-01370	60	75	114	96	33	9	15	1,5	M8	250	700
VT LOWER	17-4349	10-01373	40	75	114	96	33	9	15	1,5	M8	140	300
VT LOWER	17-4350	10-00015	60	75	114	96	33	9	15	1,5	M8	250	700

Zellpuffer

Zellpuffers feature a very robust design. The wide selection of sizes allows for a universal use. Zellpuffers are particularly suited as resilient deflection limiters and for buffering shock loads with mobile and non mobile driven machines and as stops in general.

The Zellpuffer are manufactured from Pu, Diplocell.

Technical Drawing

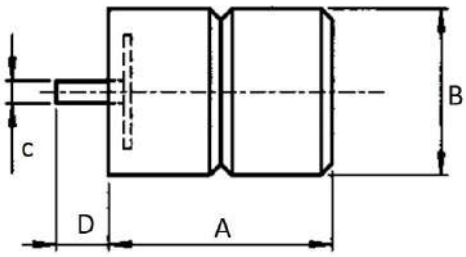

SHAFT FIXED ZELLPUFFER

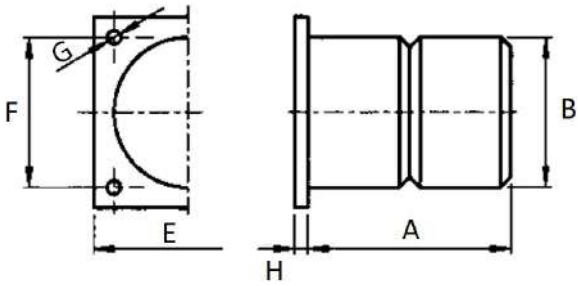

PLATE FIXED ZELLPUFFER

Product Data

DRAWING NO.	PART NO.	DIMENSIONS (mm)							
		A	ØB	C	D	E	F	ØG	H
PLATE FIXED ZELLPUFFER									
70.10031	54006110	40	80	-	-	110	80	12,5	10
70.10032	54006111	80	80	-	-	110	80	12,5	10
70.10033	54006112	120	80	-	-	110	80	12,5	10
70.10013	54006092	100	100	-	-	125	100	12,5	10
70.10014	54006093	150	100	-	-	125	100	12,5	10
70.10015	54006094	63	125	-	-	160	125	17	12
70.10016	54006095	125	125	-	-	160	125	17	12
70.10017	54006096	190	125	-	-	160	125	17	12
70.10018	54006097	80	160	-	-	200	160	17	12
70.10019	54006098	160	160	-	-	200	160	17	12
70.10020	54006099	240	160	-	-	200	160	17	12
70.10021	54006100	100	200	-	-	250	200	21	14
70.10022	54006101	200	200	-	-	250	200	21	14
70.10024	54006103	300	200	-	-	250	200	21	14
70.10025	54006104	250	250	-	-	315	250	21	15
70.10026	54006105	375	250	-	-	315	250	21	15
70.10027	54006106	475	315	-	-	400	315	21	15
70.10029	54006108	400	400	-	-	500	400	25	20
70.10030	54006109	600	400	-	-	500	400	25	20

Product images are graphical representations. Actual items may differ in appearance

DRAWING NO.	PART NO.	DIMENSIONS (mm)							
		A	ØB	C	D	E	F	ØG	H
SHAFT FIXED ZELLPUFFER									
70.10085	54006164	40	80	M12	35	-	-	-	-
70.10086	54006165	80	80	M12	35	-	-	-	-
70.10087	54006166	120	80	M12	35	-	-	-	-
70.10065	54006144	100	100	M12	35	-	-	-	-
70.10068	54006147	150	100	M12	35	-	-	-	-
70.10069	54006148	63	125	M12	35	-	-	-	-
70.10070	54006149	125	125	M12	35	-	-	-	-
70.10072	54006151	190	125	M12	35	-	-	-	-
70.10073	54006152	80	160	M12	35	-	-	-	-
70.10074	54006153	160	160	M12	35	-	-	-	-
70.10075	54006154	240	160	M12	35	-	-	-	-
70.10076	54006155	100	200	M12	35	-	-	-	-
70.10077	54006156	200	200	M12	35	-	-	-	-
70.10078	54006157	300	200	M12	35	-	-	-	-
70.10080	54006159	125	250	M24	80	-	-	-	-
70.10081	54006160	250	250	M24	80	-	-	-	-
70.10082	54006161	375	250	M24	80	-	-	-	-
70.10083	54006162	315	315	M24	80	-	-	-	-

Washers

Overload and rebound washers (top and bottom) are necessary to limit maximum movement in the event of shock loading. Type C has a vulcanised rubber ring.

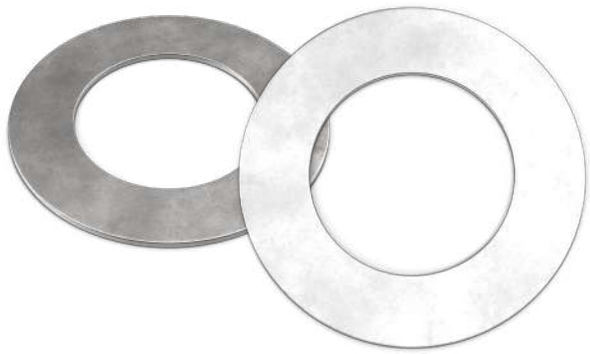

Technical Drawing

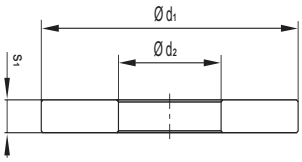

TYPE A

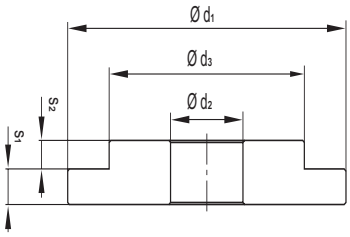

TYPE B

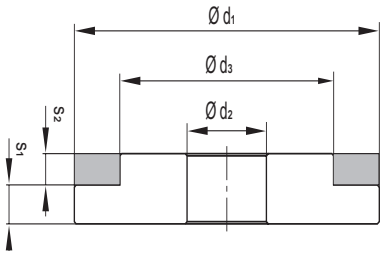

TYPE C

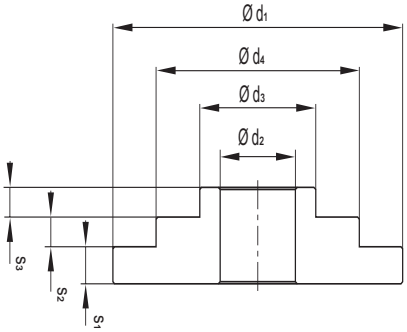

TYPE D

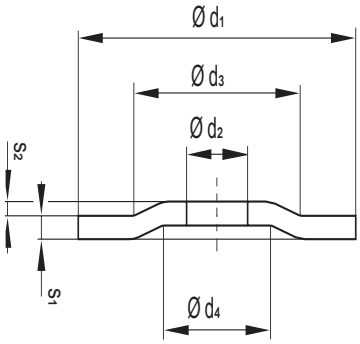

TYPE E

Product Data

DRAWING NO.	PART NO.	DIMENSIONS (mm)					BOLT SIZE	MAX. TORQUE (Nm)
		$Ød_1$	$Ød_2$	S_1	S_2	$Ød_3$		
TYPE A								
039 18 753	49041777	40	9	2,5	-	-	M8 5.6	11
18-0379C	20-00531	51	10	4	-	-	M10	25
039 18 755	49041776	50	11	2,5	-	-	M10 5.6	23
18-0472D	20-00536	51	16	4	-	-	M16	60
20-0562B	20-00416	52	12,5	3	-	-	M12	40
20-0562D	20-00644	55	20,5	5	-	-	M20	120
20-0562K	20-01103	57	12	3	-	-	M12	40
039 18 768	49041778	70	13	3	-	-	M12 5.6	39
040 18 922	49032678	75	16,2	4	-	-	M16 5.6	90
18-0391C	20-00532	80	16	5	-	-	M16	60
18-1101C	20-00533	100	20	6	-	-	M20	120
039 18 766	49041775	100	21	6,3	-	-	M20 5.6	180
18-1550C	20-02818	139	24	10	-	-	M24	200

Product images are graphical representations. Actual items may differ in appearance

DRAWING NO.	PART NO.	DIMENSIONS (mm)					BOLT SIZE	MAX. TORQUE (Nm)
		$Ød_1$	$Ød_2$	S_1	S_2	$Ød_3$		
TYPE B								
040 18 038	97139	35	17	4	2	28	M16 5.6	90
057 18 001	49056605	48	10,5	5	5	15	M10 5.6	23
18-0241D	20-00529	55	12,9	5	2,5	25	M12	40
040 18 039	97138	55	12,7	5	3	24,5	M12 5.6	39
18-0472C	20-00535	55	16	5	2,7	25	M16 5.6	90
201 98105AA	54002459	75	16,2	5	5	32	M16 5.6	90
040 18 036	97141	75	20,2	5	3	35	M20 5.6	180
18-0311B	20-00773	80	16	6	3	31,5	M16	60
20-0562N	20-00528	80	20	5	2	35	M20	120
040 18 037	97140	104	17	5	3	46	M16 5.6	90
17-5689E	10-05112	110	20,5	5	3	52,5	M20	120
040 18 035	97142	110	24,3	6	4	45,9	M24 5.6	320
18-0146C	20-00527	116	24	8	4	47,25	M24	200
TYPE C								
15-0286	10-03666	47,63	12,75	3,17	3,18	28,58	M12	40
15-3528	20-02894	67	20	5	5	35	M20	120
15-3526	10-03862	95	24,5	8	6	47,25	M24	200

DRAWING NO.	PART NO.	DIMENSIONS (mm)							BOLT SIZE	MAX. TORQUE (Nm)
		$ØD_1$	$ØD_2$	$ØD_3$	$ØD_4$	S_1	S_2	S_3		
TYPE D										
057 18 756	511927	80	16,5	31	43	5	11	5	M16 5.6	90
040 18 935	50032235	92	17	28	34	5	4	2	M16 5.6	90

DRAWING NO.	PART NO.	DIMENSIONS (mm)					BOLT SIZE	MAX. TORQUE (Nm)
		$Ød_1$	$Ød_2$	S_1	S_2	$Ød_3$		
TYPE E								
040 18 917	49026836	75	16,5	5	3	45	M16 5.6	90

Application Questionnaire

Please fax, scan or post the completed questionnaire back to your sales contact or our technical centre.

How to contact us:

- Email: antivibration@trelleborg.com
- Website: www.trelleborg.com/anti-vibration-solutions/contact
- Our app: MountFinder Pro.

CUSTOMER INFORMATION	
Enquiry from	
Telephone NO.	
Fax NO.	
E-mail Address	
End User	

APPLICATION DETAILS	
Application Description	
Mobile or Stationary	
Total Number of Installations	
Minimum temperature @ mountings (°C)	
MAX.imum temperature @ mountings (°C)	
Environmental Conditions	

ENGINE DETAILS						
Manufacturer						
Model						
Weight (kg)						
Spreed Range (rpm)						
NO. of Cylinders						
Cylinder Configuration						
Mass Moments of Inertia (kg/mm^2)	Ixx		Iyy		Izz	
C.O.G from datum RFOB (mm)	X		Y		Z	
Block Sizes (mm)	X		Y		Z	

TRANSMISION DETAILS						
Manufacturer						
Model						
Weight (kg)						
NO. of Cylinders						
Mass Moments of Inertia (kg/mm^2)	Ixx		Iyy		Izz	
C.O.G position from Datum (mm)	X		Y		Z	
Block Size (mm)	X		Y		Z	

MOUNT INFORMATION			
Mount Number	Position from datum (RFOB)		
	X	Y	Z
1			
2			
3			
4			
5			
6			

Further information

Please supply a drawing of proposed layout.

- Have all suspended masses been detailed?
- Are there any mounting point restrictions?

Notes

Local presence. Global reach.

USA
Trelleborg Industrial Products USA Inc.
200 Veterans Boulevard Suite 3
South Haven,
MI 49090
USA
Tel +1 269 639 9891 (Main)
Tel (800) 424 8857 (Toll-free)
Email industrialavs.usa@trelleborg.com

UK
Trelleborg Antivibration Solutions
1 Hoods Close
Leicester
LE4 2BN
Tel +44 116 2670 455

SWITZERLAND
Trelleborg Antivibration Solutions
Soodstrasse 57
8134 Adliswil
Tel +41 44 711 17 17
Fax +41 44 710 05 42

NETHERLANDS

Trelleborg Antivibration Solutions
Robijn 600, 3316 KE, Dordrecht
The Netherlands
Tel +31 (0) 78 6182844

GERMANY

Trelleborg Antivibration Solutions
Berliner Straße 17
16727 Velten
Tel +49 3304 365 0

Trelleborg Antivibration Solutions
Dr.-Werner-Freyberg Strasse 7
69514 Laudenbach
Tel +49 (6201) 60 20 30
Fax +49 (6201) 60 20 319

INDIA

Trelleborg Industrial AVS India Pvt Ltd
19/1, Kalena Agrahara Bannerghatta Main Road
Bengaluru – 560 076
Tel +91 80 25189700

CHINA

Trelleborg Antivibration Solutions (Suzhou) Co., Ltd
Building P, Phase III Plainvim International Suxiang
Science Industrial Park, Chunxing Road 46,
Xiangcheng District
215000 Suzhou
Tel +86 510 853 09428
Fax +86 510 853 09465

TRELLEBORG

Trelleborg Antivibration Solutions (AVS) - Leading the Frontier of Innovation in Noise and Vibration Control. With our advanced polymer technology and expertise in rubber-to-metal bonding, we're pioneers in combating noise and vibration. As part of Trelleborg Group's Industrial Solutions, we bring over a century of excellence to various sectors like rail, marine, and industrial. Our focus is on crafting isolation, attenuation, and suspension solutions that redefine quality and reliability. Our new value proposition, "The Frontline of Innovation," signifies our commitment to pushing polymer technology's limits. We enhance comfort, safety, and efficiency while extending product life and optimizing costs. Join us at Trelleborg AVS for innovation-driven excellence.

Website

Linked In

WWW.TRELLEBORG.COM/ANTI-VIBRATION-SOLUTIONS

ANTIVIBRATION@TRELLEBORG.COM